model 12000

product guide

features

- 110 t (120 USt) Lift Capacity
- 397 mton-m (2,880 ft-kips) Maximum Load Moment
- 70,1 m (230 ft) Heavy-Lift Boom
- 82,3 m (270 ft) Fixed Jib on Heavy-Lift Boom
- 94,5 m (310 ft) Luffing Jib on Heavy-Lift Boom
- 247 kW (332 HP) engine
- 163 mpm (535 fpm) line speed
- 21 180 kg (46,700 lb) Maximum Line Pull
- 11 400 kg (25,100 lb) Rated Line Pull
- 10 000 kg (25,000 lb) Material Rehandling Clamshell capacity
- Fast, efficient self-assembly and disassembly
- Manitowoc Crane CARE comprehensive support

contents

Specifications	3
Outline Dimensions	6
Transport Data	10
Crane Assembly	11
Performance Data	12
Load Chart Notes	13
Boom Combinations	14
Range Diagrams and Load Charts	16
Clamshell	25
Crane CARE	26

Manitowoc Crane Group

www.manitowoccranegroup.com

notes

Upperworks

Engine

Hino P11C-UN, 6 cylinder, water-cooled diesel, direct fuel injection with turbocharger, 247 kW (332 HP) at 2000 high-idle RPM. Maximum torque 1300 N·m (959 lb·ft) net at 1,500 rpm (SAE J 1349).

One diesel fuel tank, 400 liters (105 gallons) capacity.

Two 12 volt 136 AH capacity batteries, 24 volt system and 50 amp alternator.

All wiring harnesses and connectors are numbered for easier servicing. Machine is equipped with individual fused branch circuits.

Controls

Full-flow hydraulic control system for constant variable pressure to front and rear drums, boom hoist brakes and clutches. Controls respond instantly to the touch, delivering smooth function operation.

Relief valve pressures:
Load hoist, boom hoist and propel system . . . . . 315kg/cm2 (4,480 psi)
Swing system 280 kg/cm2, (3,980psi)
Control system . . . . . 80 kg/cm2 (1,140 psi)

Hydraulic System

All four variable displacement piston-type pumps are driven by a heavy-duty pump drive. One of these pumps is used in the right propel circuit and hook hoist circuit, and can accommodate an optional third circuit. Another is used in the left propel circuit and hook hoist circuit. The third variable displacement pump is used in the boom hoist circuit. The fourth variable displacement pump is used in the swing circuit. In addition, two gear pumps are used in the control system and auxiliary equipment, and two gear pumps serve the brake cooling system.

Maximum pressure rating . . . . 325 kg/cm2 (4,640 psi)

Load hoist, boom hoist and propel . . . 2 Piston pumps
Boom Hoist . . . . . 1 Piston pump
Swing . . . . . 1 Piston pump
Control system and auxiliary . . . . . 2 Gear pumps
Brake cooling system . . . . . 2 Gear pumps

Reservoir capacity: . . . . . 460 liter (121 US gallon).

Cooling: Oil-to-air heat exchanger (plate-fin type).

Filtration: Full-flow and bypass type with replaceable paper element.

Drums

Front and rear drums for load hoist powered by hydraulic variable displacement piston-type motors, driven through planetary reducers. Powered hoisting/lowering and free-fall operation is standard. Drum turn indicators for front and rear drums are also standard.

Brake & Clutches (compatible): Forced-circulation oil-cooled wet-type multi-disc brakes, each using positive and negative actuation. An external ratchet is fitted for locking the drums.

Drums: (front and rear) 613 mm (24.1") P.C.D. X 622 mm (24.5") wide drums, grooved for 26.0 mm (1.02") wire rope.

Wire rope capacity:
Front drum 260 m (853 ft) working length
Rear drum 230 m (754 ft) working length
Storage length (each drum) 253 m (830')

Line speed: Single line on the first drum layer
Hoisting: . . . . . 120m/min (394 ft/min)
Lowering: . . . . . 120m/min (394 ft/min)

Optional third drum: same dimensions and specifications as front and rear drums. Wire rope working length is 240 m (787').

Swing System

Swing unit: Powered by a hydraulic piston-type motor driving spur gears through planetary reducers, the swing system provides 360° rotation.

Swing brake: A spring-set, hydraulically released multiple-disc brake is internally fitted in swing motor.

Swing lock: 2 Position lock for transportation.

Rotating bed turntable: Single-row ball bearing with an integral internally cut swing gear.

Swing speed: 2.7 rpm

Boom Support System

Single drum powered by a hydraulic axial piston motor through a planetary reducer.

Brake: A spring-set, hydraulically released multiple-disc brake is internally fitted in the boom hoist motor and operated through a counter-balance valve. An external ratchet is fitted for locking the drum.

Drum: Single drum, grooved for 20 mm (13/16") dia. wire rope. Boom Hoist reeving is 10-part line.

specifications

Wire Rope Capacity:
Drum 155 m (508 ft) working length.

Line speed: Single line on the first drum layer

Hoisting . . . . . 48m/min (157 ft/min)
Lowering . . . . . 48m/min (157 ft/min)

Gantry

This high folding type gantry is fitted with a sheave frame for boom hoist reeving. It provides full up, full down positions.

Counterweight

QTY.	ITEM	UNIT WEIGHT kg	UNIT WEIGHT lb	TOTAL WEIGHT kg	TOTAL WEIGHT lb
1	Counterweight A	10 000	22,050	10 000	22,050
2	Counterweight B	7 000	15,435	14 000	30,870
1	Counterweight C	10 000	22,050	10 000	22,050
	Counterweight TOTAL			**34 000**	**74,970**

Operator's Cab

Totally enclosed, full vision cab fitted with tinted safety glass. A fully adjustable, highbacked seat with arm rests permits operators to set their ideal working position. Side mounted console for auxiliary controls and instruments. An air conditioner, a signal horn, cigarette lighter, windshield wiper and inspection lamp socket are standard features.

Controls

In front of operator are the foot pedals for front, rear and third drum (option) brakes and foot throttle pedal. At operator's right side are the travel (propel) control levers and the function lock lever. To the operator's right front are the boom hoist control lever, front and rear winch control levers and the free-fall select switches for the front and rear winches and drum turn indicators (front/rear drum). To the operators left front are the swing control lever and third drum (option) control lever. To the operator's left are the crawler extend/retract lever and the positive swing lock. The left-hand console contains switches for the anti-two-block/boom overhoist. Directly in front of the console are the drum pawl lock for boom, front, rear and third drum (option) and the engine ignition key. The swing parking brake and signal horn are mounted on the swing control lever.

Gauges
Fuel gauge, engine water temperature gauge, hour meter and tachometer are located on the monitor display.

Warning display
All potential warnings, including battery charge, engine oil pressure, air cleaner, engine oil filter, control main pressure, and hydraulic oil temperature will appear on the monitor display when a fault occurs.

Safety device
Function lock lever, anti-two-block, boom over hoist limit switch, boom angle indicator, signal horn, boom hoist drum lock, front and rear drum lock, swing lock, swing alarm (buzzer and lamps), boom backstops and load moment indicator.

Lowerworks

Carbody

The durable carbody features steel welded construction with extendible axles.

Crawlers

Crawler assemblies can be hydraulically extended for wide-track operation or retracted for transportation. Crawler belt tension adjusted with hydraulic jack and maintained by shims between idler block and frame.

Crawler drive
The independent hydraulic propel drive is built into each crawler side frame. Each drive consists of a hydraulic motor driving a propel sprocket through a planetary gearbox. The hydraulic motor and gearbox are built into the crawler side frame within the shoe width. The track rollers are sealed for maintenance-free operation.

Crawler brakes
Spring set, hydraulically released, multiple disc-type parking brakes are built into each propel drive.

Steering mechanism
The hydraulic propel system provides both skid steering (driving one track only) and counter-rotating steering (driving each track in opposite direction) and differential track speed.

Crawler shoes
66 shoes per side, 914 mm (36") wide each crawler.

Travel speed (High/Low) 1.4/1.0 km/h (0.87/0.62 mph)

Attachments

Boom

Welded lattice construction using tubular, high-tensile steel chords with pin connections between sections. Boom tip is open throat construction. Two idler sheaves and four point sheaves are standard.

Basic boom length 15,24 m (50') consists of the boom butt section 7,62 m (25' 0") and boom top section 7,62 m (25' 0").

Optional boom inserts are available to provide extension capabilities. They also have welded lattice construction with tubular, high-tension steel chords and pin connections on each one of 3,0 m (10'), 6,1 m (20'), 12,2 m (40') inserts.

Maximum total length of boom 70,1 m (230').

Fixed Jib

The optional fixed jib employs welded lattice construction with tubular, high-tension steel chords with pin connections between sections.

Basic jib length 9,14 m (30') consists of Jib butt section 4,57 m (15') and jib top section 4,57 m (15').

Optional jib boom inserts of 3,0 m (10'), 6,1 m (20') are available for extension capabilities up to 21,3 m (70').

Maximum total length of boom and jib 61,0 m (200') + 21,3 m (70') is 82,3 m(270').

Luffing Jib

- Optional: Components to make up 18,3 m (60') basic luffing boom including 7,62 m (25') butt, 9,14 m (30') special luffing boom insert (with idler sheave), 1,5 m (5') top, boom strut assembly, jib strut assembly, jib stop assembly, strut backstops, backstay pendants with sheaves, mounting parts and LMI hardware.
- Optional: 3,1 m (10'), 6,1 m (20'), and 12,2 m (40') luffing boom inserts. Utilize optional boom inserts to make up to 45,7 m (150') of luffing boom.
- Optional: 18,3 m (60') basic luffing jib assembly including 5,8 m (19') luffing jib butt, 6,1 m (20') luffing jib insert, 6,4 m (21') luffing jib top, 6,4 m (21') front strut assembly, 5,3 m (17' 5") rear strut assembly, and luffing jib point roller assembly (single sheave) which is required during erection of the jib.

Maximum 51,8 m (170') jib length for 42,7 m (140') boom length and maximum 30,4 m (100') jib length for 45,7 m (150') boom length.

Note: Luffing boom utilizes the liftcrane boom inserts (except for the 30' special luffing boom insert). Also, the third drum and wire rope must be ordered with luffing jib attachment.

Tools and Accessories

A set of tools and accessories are furnished.

Optional Equipment

- Optional: Blocks and Hooks each with roller bearing sheaves grooved for 26.0 mm (1.02") diameter wire rope, and roller bearing swivel with hook latch.
- 12 t ball hook, 456 kg wedge socket for 26 mm wire rope.
  (15 USt ball hook, 1,310 lb wedge socket for 26 mm wire rope.)
- 35 t hook block, 700 kg with one 622 mm Nominal O.D. roller bearing sheave.
  (40 USt hook block, 1,881 lb with one 24" Nominal O.D. roller bearing sheaves.)
- 70 t hook block, 900 kg, three 622 mm Nominal O.D. roller bearing bearing sheave.
  (90 USt hook block, 4,060 lb, with three 24" Nominal O.D. roller bearing sheaves.)
- 110 t hook block, 1 700 kg, with five 622 mm Nominal O.D. roller bearing sheaves.
  (120 USt hook block, 3,760 lb with five 24" Nominal O.D. roller bearing sheaves.)
- Optional: Detachable upper boom point with one 575 mm (22.6") Nominal outer diameter roller bearing steel sheave grooved for 26mm (1.02") rope for liftcrane.

Travel kit
Custom color

Working Weight

Approximately 99,000 kg (218,000 lb) including upperworks and lowerworks, full upper counterweights, full carbody counterweights and 15,2 m (50') basic boom.

Ground Pressure

Approximately 92.9 kPa (13.5 psi) with basic boom and no load.

Gradeability

With basic boom: 30%.

outline dimensions

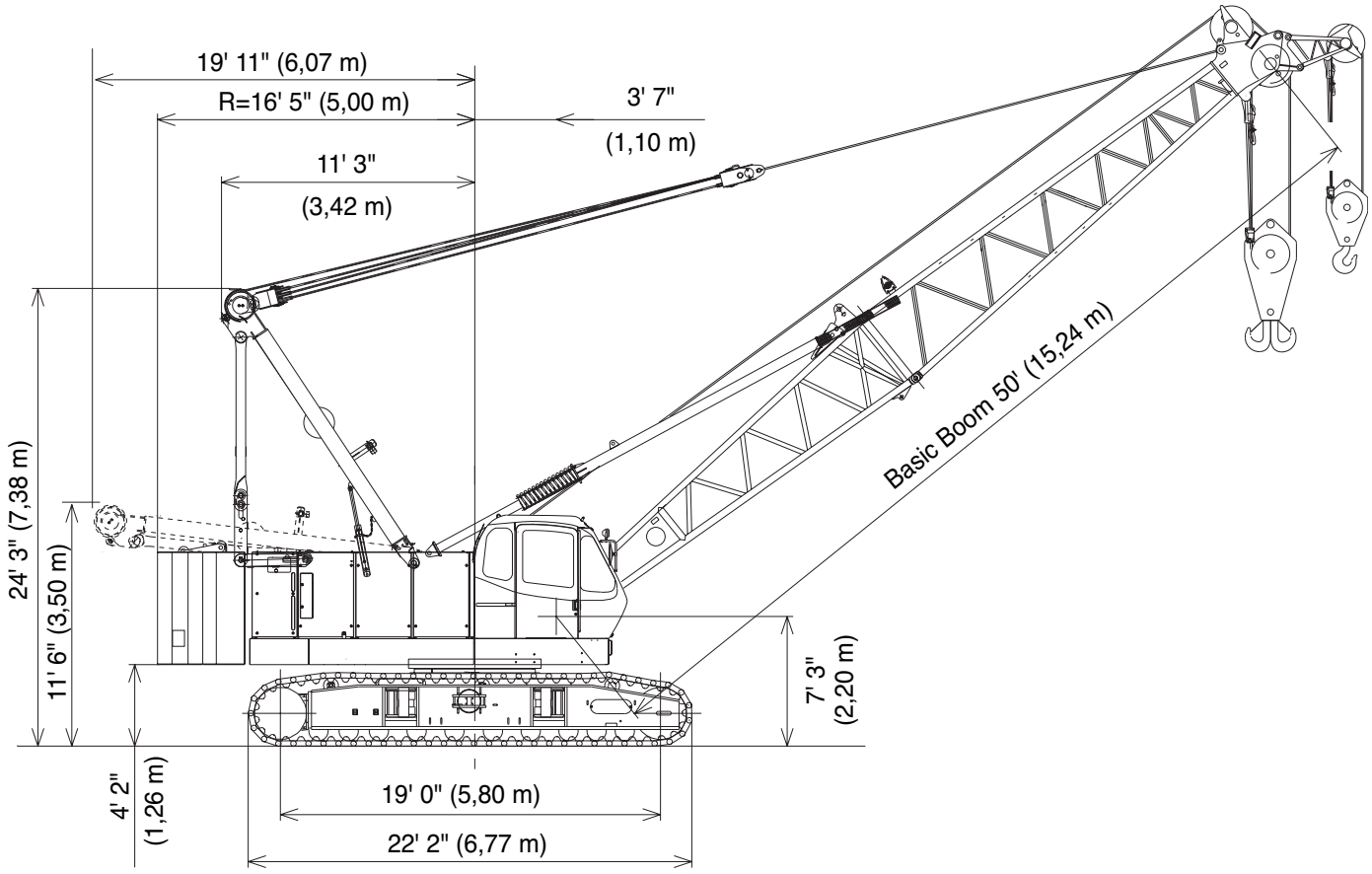

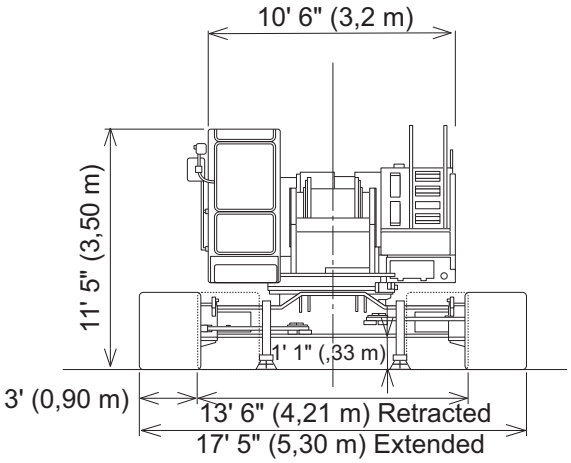

outline dimensions

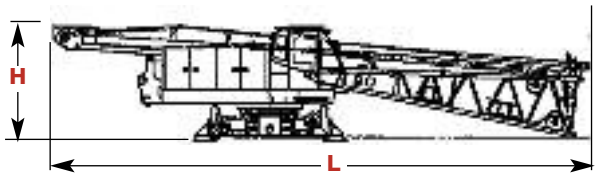

Upperworks without Crawlers		x 1
Length	15,12 m	49' 7"
Width	3,24 m	10' 8"
Height	3,15 m	10' 4"
Weight	42 661 kg	94,052 lb

Note: Weight includes base machine, gantry, maximum hoist and whip lines on drums, boom butt, full hydraulic fluid reservoir, and one third tank of fuel.

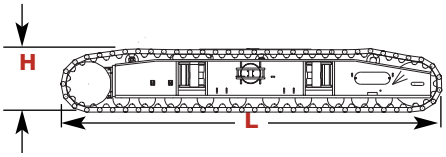

Crawlers		x 2
Length	6,77 m	22' 3"
Width	0,90 m	3' 0"
Height	1,15 m	3' 9"
Weight	11 830 kg	26,085 lb

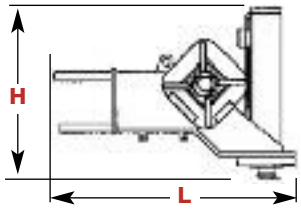

Hydraulic Jack (if removed)		x 4
Length	1,36 m	4' 5"
Width	0,32 m	1' 1"
Height	0,96 m	3' 2"
Weight	430 kg	950 lb

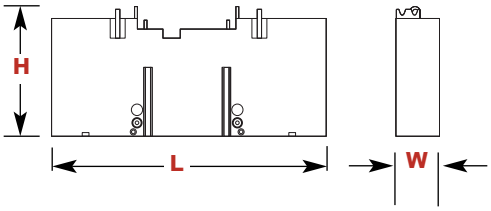

Upper Counterweight A		x 1
Length	3,20 m	10' 5"
Width	0,58 m	1' 11"
Height	1,94 m	6' 4"
Weight	10 000 kg	22,050 lb

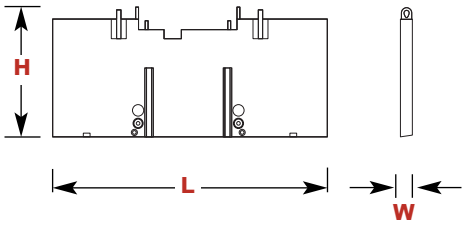

Upper Counterweight B		x 2
Length	3,20 m	10' 5"
Width	0,49 m	1' 7"
Height	1,92 m	6' 3"
Weight	7 000 kg	15,435 lb

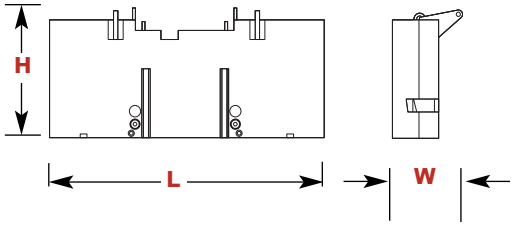

Upper Counterweight C		x 1
Length	3,20 m	10' 5"
Width	0,69 m	2' 3"
Height	1,92 m	6' 3"
Weight	10 000 kg	22,050 lb

Optional 3rd Drum & Wire Rope		x 1
Weight	2 660 kg	5,865 lb

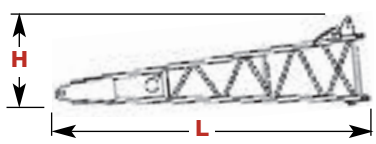

Boom Butt 7.6m (25')		x 1
Length	7,79 m	26' 3"
Width	1,68 m	5' 6"
Height	2,06 m	6' 9"
Weight	2 110 kg	4,652 lb

Option

outline dimensions

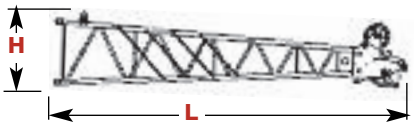

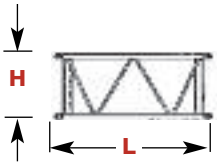

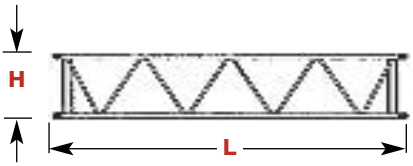

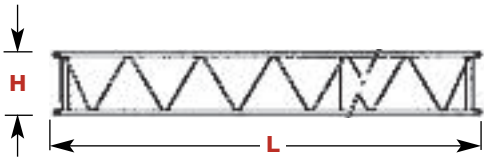

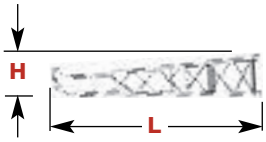

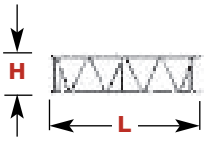

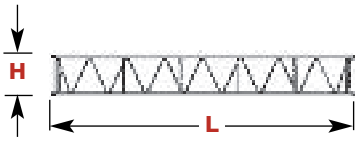

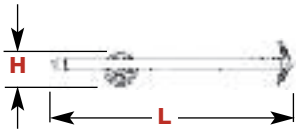

Boom Top 7.6m (25')		x 1
Length	8,32 m	27' 4"
Width	1,68 m	5' 6"
Height	1,69 m	5' 7"
Weight	1 525 kg	3,362 lb

Boom Insert 3,0 m (10')		x 1, 2
Length	3,17 m	10' 5"
Width	1,68 m	5' 6"
Height	1,69 m	5' 7"
Weight	380 kg	838 lb

Boom Insert 6,1m (20')		x 1, 2
Length	6,22 m	20' 5"
Width	1,68 m	5' 6"
Height	1,69 m	5' 7"
Weight	655 kg	1,445 lb

Boom Insert 12,2 m (40')		x 1, 2, 3
Length	12,31 m	40' 5"
Width	1,68 m	5' 6"
Height	1,69 m	5' 7"
Weight	1 195 kg	2,635 lb

Note: Use one "A" type insert with lug required for any boom combinations that require a 12,2 m (40') insert.

Fixed Jib Butt		x 1
Length	4,81 m	15' 9"
Width	0,80 m	2' 8"
Height	0,80 m	2' 8"
Weight	200 kg	440 lb

Fixed Jib Top		x 1
Length	4,91 m	16' 1"
Width	0,80 m	2' 8"
Height	0,80 m	2' 8"
Weight	280 kg	617 lb

Fixed Jib Insert 3,0 m (10')		x 1, 2
Length	3,12 m	10' 3"
Width	0,80 m	2' 8"
Height	0,80 m	2' 8"
Weight	100 kg	220 lb

Fixed Jib Insert 6,1 m (20')		x 1, 2
Length	6,16 m	20' 3"
Width	0,80 m	2' 8"
Height	0,80 m	2' 8"
Weight	180 kg	395 lb

Fixed Jib Strut		x 1
Length	3,62 m	11' 11"
Height	0,62 m	2' 0"
Weight	250 kg	550 lb

Option

outline dimensions

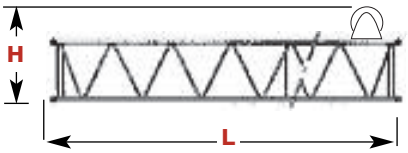

Special Luffing Boom Insert 9,1 m (30')		x 1
Length	9,27 m	30' 5"
Width	1,68 m	5' 6"
Height	2,41 m	7' 11"
Weight	1 160 kg	2,558 lb

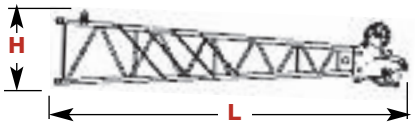

Luffing Jib Top		x 1
Length	6,91 m	22' 8"
Width	1,50 m	4' 11"
Height	1,48 m	4' 10"
Weight	1 170 kg	2,580 lb

Luffing Jib Butt		x 1
Length	5,97 m	19' 7"
Width	1,49 m	4' 11"
Height	1,32 m	4' 4"
Weight	863 kg	1,903 lb

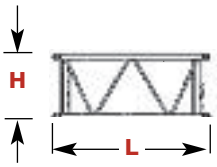

Luffing Jib Insert 3,0 m (10')		x 1, 2
Length	3,16 m	10' 5"
Width	1,49 m	4' 11"
Height	1,29 m	4' 3"
Weight	310 kg	684 lb

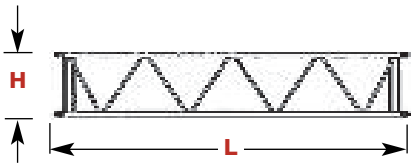

Luffing Jib Insert 6,10 m (20')		x 1, 2
Length	6,21 m	20' 5"
Width	1,49 m	4' 11"
Height	1,29 m	4' 3"
Weight	540 kg	1,147 lb

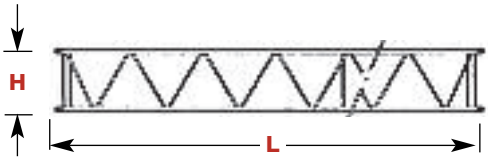

Luffing Special Boom Insert Luffing Jib Insert 12,2 m (40')		x 1, 2, 3
Length	12,31 m	40' 4"
Width	1,49 m	4' 11"
Height	1,29 m	4' 3"
Weight	960 kg	2,117 lb

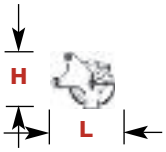

Luffing Jib Point Roller Assembly		x 1
Length	1,01 m	3' 4
Width	0,89 m	2' 11"
Height	0,91 m	3' 0"
Weight	380 kg	838 lb

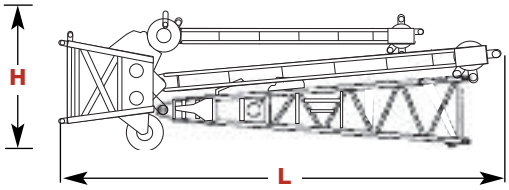

Luffing Boom Top Assembly (Shipping Style)		x 1
Length	8,19 m	26' 10"
Height	2,65 m	8' 8"
Weight	3 580 kg	7,895 lb

Option

transport data

Trailer Load Out Summary

Model 12000
No. 12000 Luffing Jib 39,6 m (130') on No. 260 Boom 38,1 m (125')

Item	Weight each Item kg (lb)	Quantity on Trailer Load # 1	2	3	4	5	6
No. 12000 Basic Crane with Crawlers Removed	42 661 (94,052)	1					
Crawler Frame	11 832 (26,085)		1				
Crawler Frame	12 832 (26,085)			1			
Counterweight A	10 000 (22,050)					1	
Counterweight B	7 000 (15,435)				1		
Counterweight B	7 000 (15,435)					1	
Counterweight C	10 000 (22,050)						1
12,2 m (40') No. 12000 Boom Insert, Pendants	1 209 (2,635)		1				
12,2 m (40') No. 12000 Boom Insert, Pendants	1 209 (2,635)			1			
12,2 m (40') No. 12000 Boom Insert, Pendants	1 209 (2,635)				1		
6,1 m (20') No. 12000 Boom Insert, Pendants	655 (1,445)					1	
6,1 m (20') No. 12000 Boom Insert, Pendants	655 (1,445)						1
3,0 m (10') No. 12000 Boom Insert, Pendants	380 (838)		1				
3,0 m (10') No. 12000 Boom Insert, Pendants	380 (838)					1	
Standard Boom Top 7,6 m (25')	1,525 (3,362)						1
Upper Boom Point	501 (1,105)			1			
4,6 m (15') No. 12000 Fixed Jib Top	280 (617)				1		
4,6 m (15') No. 12000 Fixed Jib Butt	134 (440)						1
6,1 m (20') No. 12000 Fixed Jib Insert	179 (395)				1		
6,1 m (20') No. 12000 Fixed Jib Insert	179 (395)						1
Approximate Total Shipping Weight kg (lb)		42 661 (94,052)	13 594 (29,558)	13 528 (29,825)	8 655 (19,082)	18 038 (39,768)	12 561 (27,692)

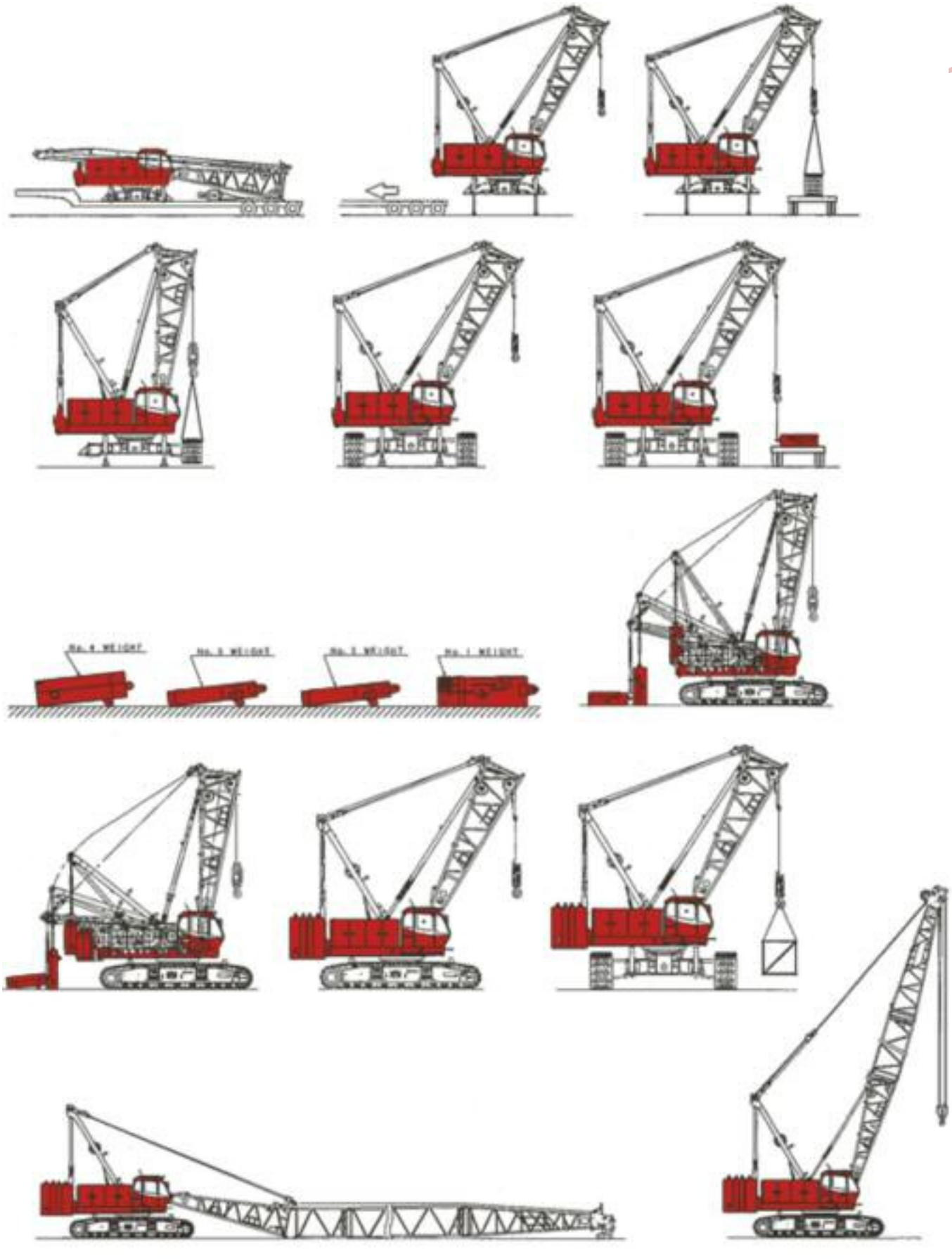
No. 4 WEIGHT
No. 3 WEIGHT
No. 2 WEIGHT
No. 1 WEIGHT

performance data

Line Pull

	Rated line pull	* Maximum line pull
Front Drum	11 400 kg (25,100 lbs)	21 180 kg (46,700 lbs)
Rear Drum	11 400 kg (25,100 lb)	21 180 kg (46,700 lbs)
Optional 3rd Drum	11 400 kg (25,100 lbs)	21 180 kg (46,700 lbs)

* *Maximum line pull is not based on wire rope strength.*

Wire Rope Specifications

Use	Specs	Diameter mm (inch)	Working Length m (ft)	Breaking Strength kg(lbs)
Front Drum	IWRC 6 X Fi (29) C/O	26,0 (1-1/16")	260 (853')	54 431 (120,000)
Rear Drum	IWRC 6 X Fi (29) C/O	26,0 (1-1/16")	230 (754')	54 431 (120,000)
Boom Hoist Drum	IWRC 6 X WS (31) C/O	20,0 (13/16")	155 (508')	33 430 (73,700)

Model 12000 Front and Rear Winch Performannce (Optional: Third Winch)

		Line speed (ft/min)					
	Layer	1	2	3	4	5	6
Line Pull	(lbs)						
	0	394	422	450	479	505	535
	5,000	387	415	443	471	499	526
	10,000	353	353	353	353	353	353
	15,000	235	235	235	235	235	235
	20,000	117	117	117	117	117	117
Rated Line pull	25,000	141	141	141	141	141	142
	30,000	118	118	119	121	122	123
	35,000	103	104	105	105		
	40,000	92	92				

		Line speed (m/min)					
	Layer	1	2	3	4	5	6
Line Pull	(kg)						
	0	120	129	137	146	155	163
	2 268	118	126	135	143	152	160
	4 536	108	108	108	108	108	108
	6 804	72	72	72	72	72	72
	9 072	52	52	52	52	52	52
Rated Line pull	11 340	43	43	43	43	43	43
	13 608	36	36	36	37	37	37
	15 876	31	32	32	32		
	18 144	28	28				

Note:
Line speeds and line pull based on single line.
Line pulls are not based on wire rope strength.

load chart notes

1. Rated loads included in the charts are the maximum allowable freely suspended loads at a given boom length, boom angle and load radius, and have been determined for the machine standing level on firm supporting surface under ideal operating conditions. The user must limit or de-rate rated loads to allow for adverse conditions (such as soft or uneven ground, out-of-level conditions, wind, side loads, pendulum action, jerking or sudden stopping of loads, inexperience of personnel, multiple machine lifts, and traveling with a load).
2. Capacities do not exceed 75% of minimum tipping loads. Capacities based on factors other than machine stability such as structural competence are shown by asterisk * in the charts located in the operator's crane cab.
3. The machine must be reeved and set-up as stated in the operation manual and all the instruction manuals. If these manuals are missing, obtain replacements. Boom backstops are required for all boom lengths. Gantry must be in the fully raised position for all operations. Crawlers must be fully extended and be locked in position. The crane must be leveled to within 1% on a firm supporting surface.
4. Do not attempt to lift where no radius or load is listed as crane may tip or collapse.
5. Attempting to lift more than rated loads may cause machine to tip or collapse. Do not tip machine to determine capacity.
6. Weight of hooks, hook blocks, slings and other lifting devices are a part of the total load. Their total weight must be subtracted from the rated load to obtain the weight that can be lifted.
7. When lifting over boom point with jib or upper boom point installed, rated loads for the boom must be deducted as shown below.

Jib length m (ft)	Upper Boom Point	9,1 (30)	12,2 (40)	15,2 (50)	18,3 (60)	21,3 (70)
Deduct kg (lbs)	318 (700)	1 100 (2,400)	1 500 (3,200)	2 000 (4,200)	2 400 (5,200)	2 900 (6 200)

When lifting over luffing jib point with luffing jib roller assembly or pin connected boom point sheave (on the luffing boom top) attached, rated loads for the jib and sheave must be deducted as shown below.

	Luffing Jib Point Roller	Pin Connected Boom Point Sheave
Deduct kg (lbs)	386 (850)	218 (480)

8. The total load that can be lifted by the fixed jib is limited by rated jib loads. The total load that can be lifted with the upper boom point is limited by rated upper boom point loads.
9. Boom lengths for fixed jib mounting are 27,4 m (90 ft) to 61,0 m (200 ft).
10. The total load that can be lifted by the upper boom point is: the rated load for the luffing jib (without upper boom point installed) minus 386 kg (850 lbs); however, the upper boom point rated load should not exceed 11 300 kg (25,000 lbs).
11. An upper boom point cannot be used on a 70,1 m (230 ft) boom length.
12. The boom should be erected over the front of the crawlers, not laterally.
13. Least stable position is over the side.
14. Maximum hoist load for number of reeving parts of line for hoist rope.

Maximum Load for Main Boom

No. of Parts of Line	1	2	3	4	5
Maximum Loads kg (lbs)	11 300 (25,000)	22 600 (50,000)	33 900 (75,000)	45 200 (100,000)	56 500 (125,000)

No. of Parts of Line	6	7	8	9	10
Maximum Loads m (lbs)	67 800 (150,000)	79 100 (175,000)	90 400 (200,000)	101 700 (225,000)	110 000 (240,000)

Maximum Load for Luffing Jib

No. of Parts of Line	1	2	3	4
Maximum Loads kg (lbs)	11 300 (25,000)	22 600 (50,000)	33 900 (75,000)	36 200 (80,000)

Maximum Load for Fixed Jib

No. of Parts of Line	1
Maximum Loads m (lbs)	10 800 (24,000)

Maximum Load for Upper Boom Point (On Liftcrane Boom)

No. of Parts of Line	1	2
Maximum Loads kg (lbs)	11 300 (25,000)	22 600 (50,000)

Maximum Load for Upper Boom Point (On Luffing Jib)

No. of Parts of Line	1
Maximum Loads kg (lbs)	11 300 (25,000)

Minimum Weight of Hook Block Required for Lowering. (Luffing Jib Use)

No. of Parts of Line	1	2	3	4
Maximum Loads m (lbs)	272 (600)	544 (1,200)	680 (1,500)	800 (1,800)

15. Lifting capacities listed apply only to the machine as originally manufactured for and supplied by Manitowoc Cranes, Inc. Modifications to this machine or use of equipment other than that specified can reduce operating capacity.
16. Designed and rated to comply with ANSI Code B30.5.

Operation of this equipment in excess of rated loads or disregard of instruction voids the warranty.

boom combinations

No. 12000 Heavy-Lift Boom Combinations

Boom Length m (ft)	Boom Inserts 3,1 m (10 ft)	6,1 m (20 ft)	12,2 m (40 ft)
15,2 (50)	–	–	–
18,3 (60)	1	–	–
21,3 (70)	2	1	–
24,4 (80)	1	1	–
27,4 (90)	2	1	–
30,5 (100)	1	2	–
33,5 (110)	2	2	–
36,6 (120)	1	1	1*
39,6 (130)	2	1	1*
42,7 (140)	1	2	1*
45,7 (150)	2	2	1*
48,8 (160)	1	1	2*
51,8 (170)	2	1	2*
54,9 (180)	1	2	2*
57,9 (190)	2	2	2*
61,0 (200)	1	1	3*
64,0 (210)	2	1	3*
67,0 (220)	1	2	3*
70,1 (230)	2	2	3*

*Note: One 40 ft. (12,2 m) boom insert with lug (40A) is required for fixed jib. When no jib is installed a 40 ft (12,2 m) boom can be used instead of 40A.

No. 12000 Fixed Jib Combinations

Jib Length m (ft)	Fixed Jib Inserts 3,1m (10 ft)	6,1m (20 ft)
9,1 (30)	–	–
12,2 (40)	1	–
15,2 (50)	–	1
18,3 (60)	1	1
21,3 (70)	–	2

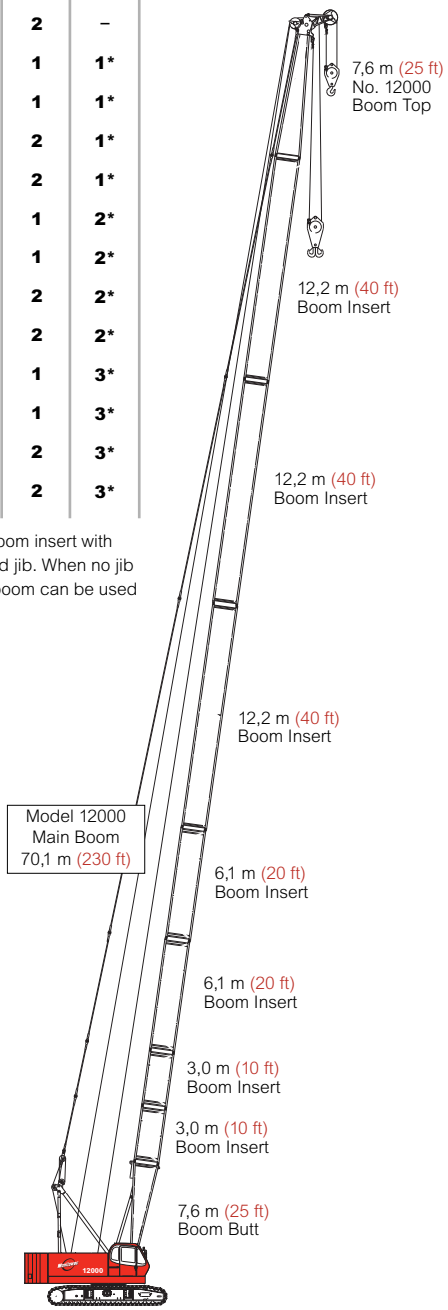

Model 12000
Main Boom
70,1 m (230 ft)

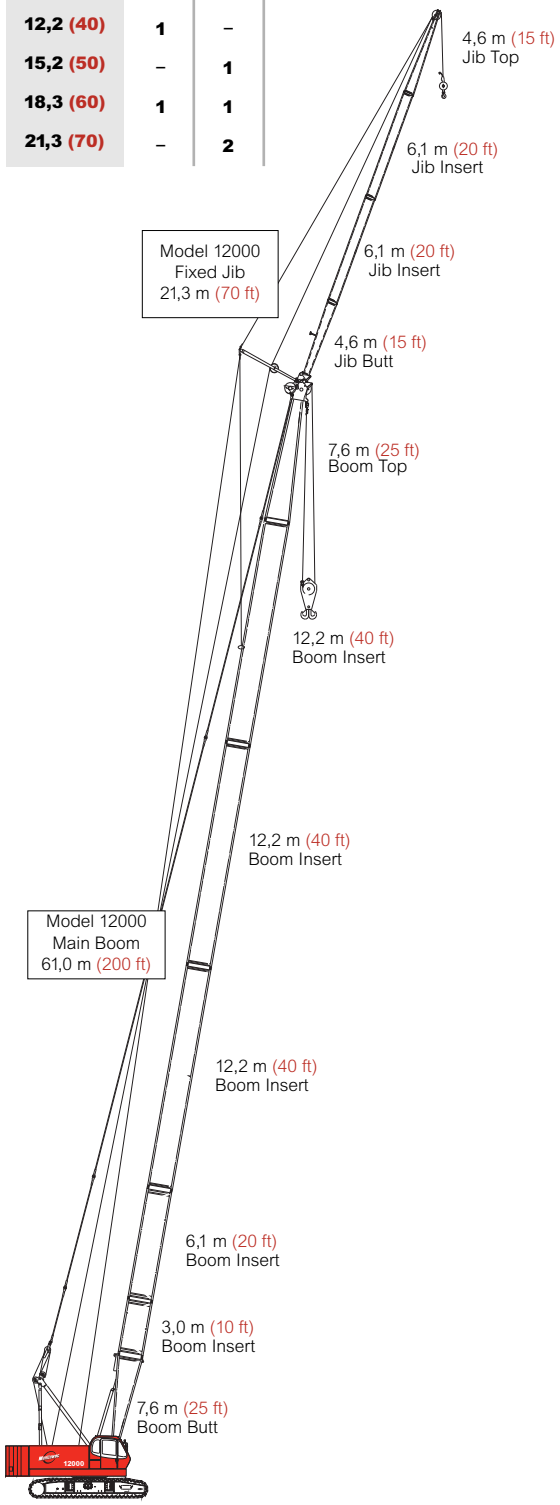

Model 12000
Fixed Jib on Main Boom
82,3 m (270 ft)

boom combinations

No. 12000 Luffing Jib Combinations

Luffing Jib Length m (ft)	Boom Inserts 3,0 m (10 ft)	6,1 m (20 ft)	12,2 m (40 ft)
18,3 (60)	–	–	–
21,3 (70)	1	–	–
24,4 (80)	2	–	–
27,4 (90)	1	1	–
30,5 (100)	2	1	–
33,5 (110)	1	–	1
36,6 (120)	2	–	1
39,6 (130)	1	1	1
42,7 (140)	2	1	1
45,7 (150)	1	–	2
48,8 (160)	2	–	2
51,8 (170)	1	1	2

No. 12000 Luffing Boom Combinations

Luffing Boom Length m (ft)	Boom Inserts 3,0 m (10 ft)	6,1 m (20 ft)	9,1 m (30 ft)	12,2 m (40 ft)
18,3 (60)	–	–	1*	–
21,3 (70)	1	–	1*	–
24,3 (80)	2	–	1*	–
27,4 (90)	1	1	1*	–
30,5 (100)	2	1	1*	–
33,5 (110)	1	2	1*	–
36,6 (120)	2	2	1*	–
39,6 (130)	1	1	1*	1
42,7 (140)	2	1	1*	1
45,7 (150)	1	2	1*	1

*Note: One 9,14 m (30') special luffing boom insert is required for luffing boom.

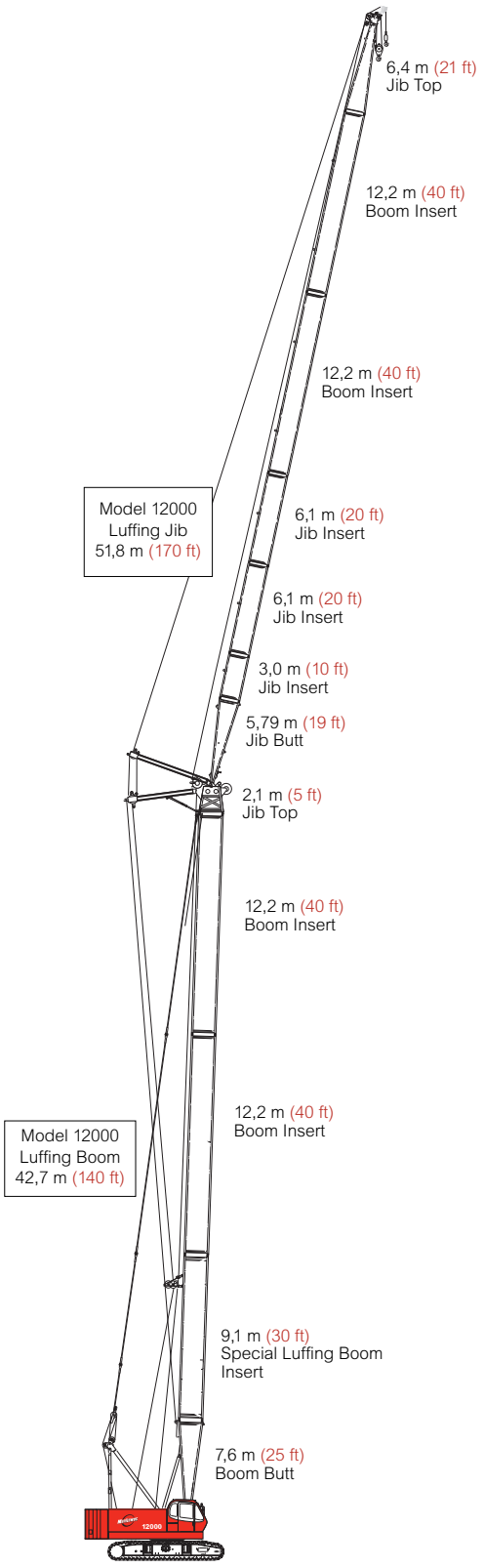

Model 12000 Luffing Jib on Luffing Boom 94,5 m (310 ft)

heavy-lift boom range diagram

No. 12000 Main Boom

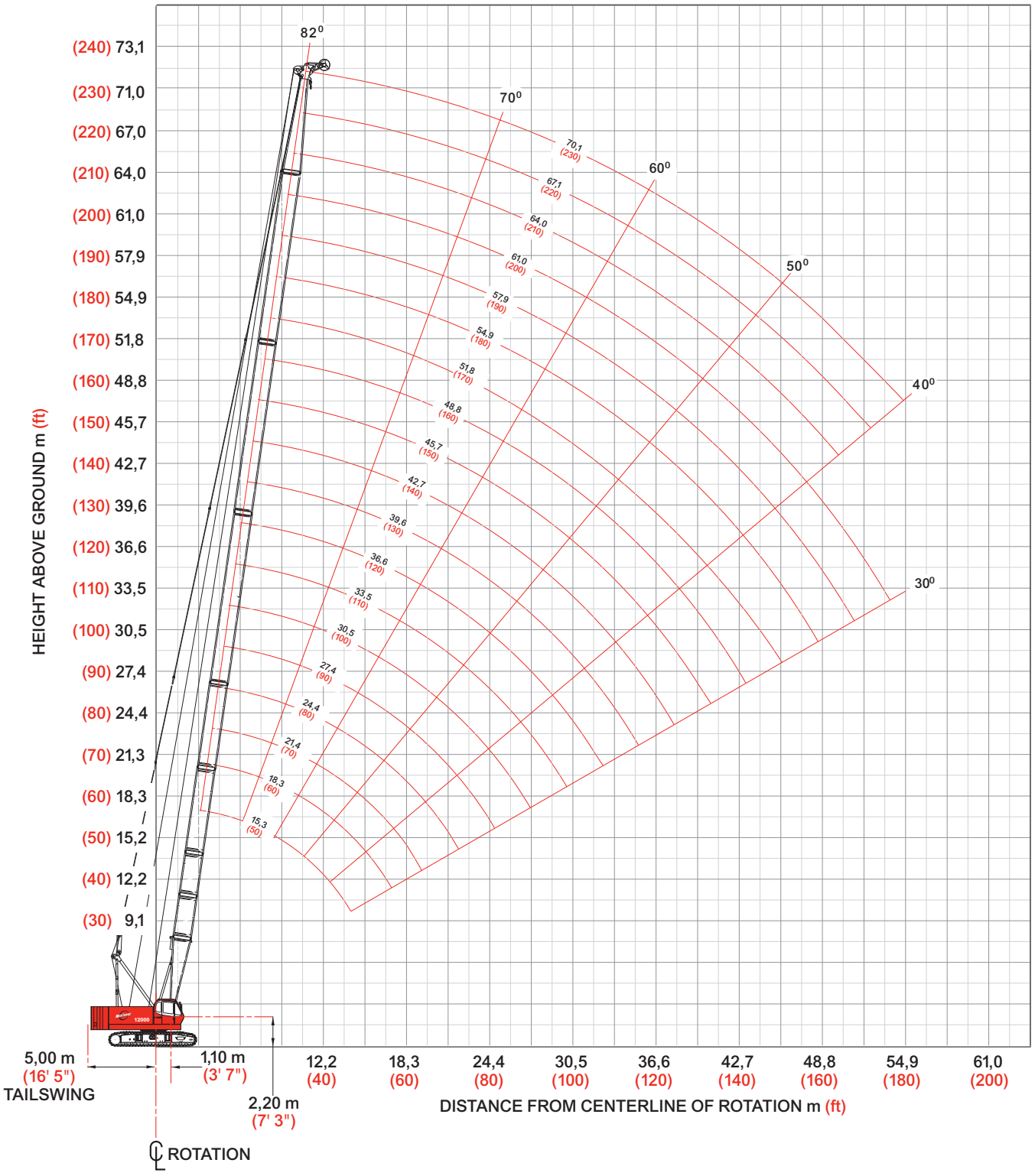

Model 12000 Liftcrane Boom Capacities
No. 12000 Main Boom

34 000 kg (75,000 lb) Upper Counterweight

360° Rating — **kg (lb) x 1 000**

Boom m (ft)	15,2 (50)	18,3 (60)	21,3 (70)	24,4 (80)	27,4 (90)	30,5 (100)	33,5 (110)	36,6 (120)	39,6 (130)	42,7 (140)	45,7 (150)	48,8 (160)	51,8 (170)	54,9 (180)	57,9 (190)	61,0 (200)	64,0 (210)	67,1 (220)	70,1 (230)
Radius																			
3,6 (12)	110,0 (240.0)																		
4,0 (14)	99,1 (206.0)	— (204.0)																	
4,5 (16)	88,4 (177.0)	87,6 (177.0)	86,2 (177.0)																
5,5 (18)	68,0 (150.0)	67,9 (150.0)	67,9 (150.0)	68,0 (150.0)	67,9 (150.0)														
6,0 (20)	62,0 (135.0)	61,9 (135.0)	61,9 (135.0)	62,0 (135.0)	61,9 (135.0)	61,9 (135.0)													
7,0 (24)	53,6 (111.9)	53,6 (111.7)	53,6 (111.7)	53,6 (111.5)	53,6 (111.5)	53,1 (111.3)	53,0 (111.3)	53,3 (111.1)	— (100.0)										
8,0 (28)	44,5 (89.5)	44,3 (89.2)	44,3 (89.0)	44,3 (88.8)	44,3 (88.8)	44,2 (88.6)	44,1 (88.4)	44,1 (88.4)	44,0 (88.1)	43,9 (87.9)	— (87.7)								
10,0 (34)	32,8 (68.3)	32,2 (68.1)	32,2 (67.9)	32,2 (67.4)	32,2 (67.4)	32,1 (67.2)	32,0 (67.0)	32,0 (67.0)	31,9 (66.7)	31,8 (66.5)	31,7 (66.3)	31,7 (66.3)	31,6 (66.1)	31,5 (65.9)	30,0 (65.4)				
12,0 (40)	25,6 (55.1)	25,6 (54.6)	25,3 (54.4)	25,3 (54.2)	24,6 (54.0)	24,9 (53.7)	24,8 (53.5)	24,8 (53.5)	24,7 (53.3)	24,6 (53.1)	24,4 (52.6)	24,5 (52.9)	24,3 (52.4)	24,2 (52.2)	24,1 (52.0)	22,6 (50.0)	22,6 (50.0)	21,3 (46.7)	19,5 (42.7)
14,0 (45)	— (47.1)	20,5 (46.7)	20,5 (46.5)	20,5 (46.2)	20,5 (46.0)	20,3 (45.8)	20,2 (45.6)	20,2 (45.6)	20,1 (45.4)	20,0 (45.1)	19,8 (44.7)	19,9 (44.9)	19,7 (44.5)	19,6 (44.3)	19,5 (44.0)	19,5 (44.0)	19,4 (43.8)	19,2 (43.4)	17,9 (40.1)
16,0 (55)		17,0 (36.1)	17,0 (35.9)	17,0 (35.4)	17,0 (35.4)	17,0 (35.0)	16,9 (34.8)	16,8 (34.8)	16,8 (34.6)	16,6 (34.3)	16,5 (33.9)	16,5 (33.9)	16,4 (33.7)	16,2 (33.2)	16,1 (33.0)	16,1 (33.0)	16,0 (32.8)	15,9 (32.6)	15,7 (32.1)
22,0 (75)					11,5 (23.5)	11,0 (23.1)	11,0 (22.9)	10,9 (22.7)	10,8 (22.4)	10,6 (22.2)	10,5 (21.8)	10,5 (21.8)	10,4 (21.6)	10,2 (21.1)	10,0 (20.9)	10,1 (20.9)	10,0 (20.7)	9,8 (20.2)	9,6 (20.0)
28,0 (95)							7,9 (16.5)	7,8 (16.3)	7,7 (16.0)	7,5 (15.6)	7,4 (15.4)	7,4 (15.4)	7,2 (14.9)	7,0 (14.7)	6,9 (14.3)	6,9 (14.3)	6,8 (14.1)	6,7 (13.8)	6,5 (13.4)
32,0 (105)								6,4 (14.1)	6,3 (13.8)	6,1 (13.4)	6,0 (13.2)	6,0 (13.2)	5,8 (12.7)	5,6 (12.3)	5,5 (12.1)	5,5 (12.1)	5,4 (11.9)	5,2 (11.4)	5,1 (11.2)
34,0 (115)									5,8 (12.1)	5,5 (11.6)	5,4 (11.2)	5,4 (11.2)	5,2 (11.0)	5,0 (10.5)	4,9 (10.1)	5,0 (10.3)	4,8 (9.9)	4,6 (9.7)	4,5 (9.2)
38,0 (125)										4,7 (10.3)	4,5 (9.9)	4,4 (9.7)	4,3 (9.4)	4,1 (9.0)	4,0 (8.8)	4,0 (8.8)	3,8 (8.3)	3,6 (7.9)	3,4 (7.4)
40,0 (135)												4,1 (8.5)	3,9 (8.1)	3,7 (7.7)	3,5 (7.2)	3,5 (7.2)	3,4 (6.8)	3,2 (6.6)	3,0 (6.1)
44,0 (145)													3,2 (7.0)	3,0 (6.6)	2,8 (6.1)	2,8 (6.1)	2,6 (5.7)	2,4 (5.2)	2,2 (4.8)
46,0 (155)														2,7 (5.7)	2,5 (5.2)	2,5 (5.0)	2,3 (4.6)	2,1 (4.4)	1,9 (3.9)
50,0 (165)															2,0 (4.4)	1,9 (4.1)	1,7 (3.7)	1,6 (3.5)	
53,3 (175)																1,6 (3.5)			

Meets ANSI B30.5 Requirements - Capacities do not exceed 75% of static tipping load.
NOTICE: This capacity chart is for reference only and must not be used for lifting purposes.

fixed jib range diagram

No. 12000 Fixed Jib on Main Boom

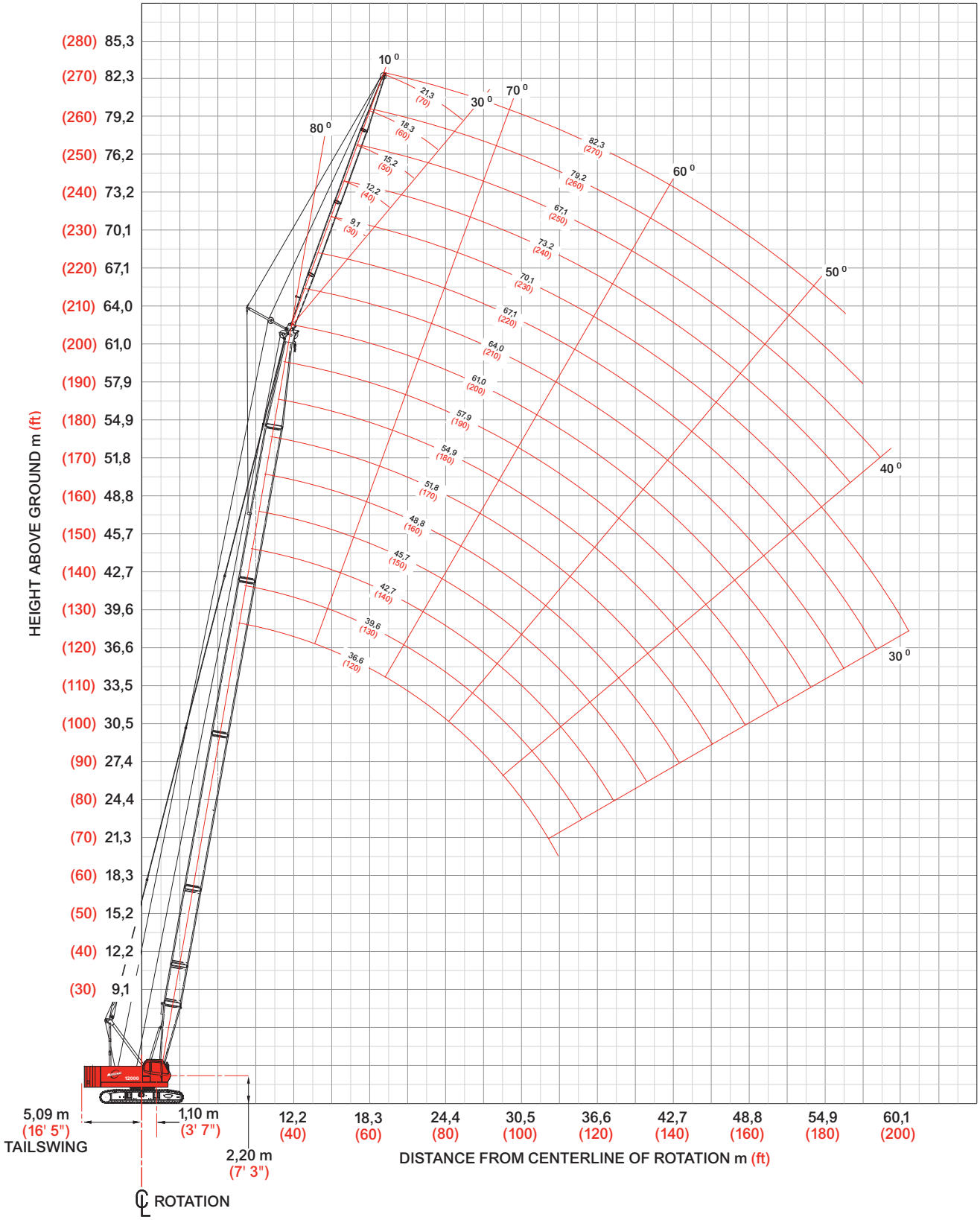

Model 12000 Series 2 Liftcrane Fixed Jib Capacities
No. 12000 Fixed Jib on Main Boom

34 000 kg (75,000 lb) Counterweight

360° Rating — **kg (lb) x 1 000**

10° Offset

Jib 9,1 m (30 ft)

Boom m (ft)	27,4 (90)	36,6 (120)	48,8 (160)	54,9 (180)	61,0 (200)
Radius					
10,0 (30)	10,8 (24.0)				
12,0 (40)	10,8 (24.0)	10,8 (24.0)			
14,0 (50)	10.8 (24.0)	10,8 (24.0)	10,8 (24.0)	— (24.0)	— (24.0)
18,0 (60)	10.8 (24.0)	10,8 (24.0)	10,8 (24.0)	10,8 (24.0)	10,8 (24.0)
24,0 (80)	10,1 (21.9)	9,7 (21.1)	9,3 (20.1)	9,0 (19.8)	8,8 (19.0)
30,0 (100)	7,4 (16.1)	7,1 (15.3)	6,6 (14.2)	6,3 (13.6)	6,1 (13.1)
36,0 (120)		5,3 (11.6)	4,8 (10.4)	4,5 (9.8)	4,3 (9.3)
42,0 (140)			3,6 (7.8)	3,3 (7.1)	3,0 (6.5)
48,0 (160)			2,7 (5.8)	2,3 (4.9)	2,0 (4.2)
52,0 (175)			2,2 (—)	1,7 (3.6)	1,5 (—)
56,0 (185)					

30° Offset

Jib 9,1 m (30 ft)

Boom m (ft)	27,4 (90)	36,6 (120)	48,8 (160)	54,9 (180)	61,0 (200)
Radius					
10,0 (30)					
12,0 (40)	— (21.0)				
14,0 (50)	9,5 (21.0)	9,5 (21.0)			
18,0 (60)	9,5 (21.0)	9,5 (21.0)	9,5 (21.0)	9,5 (21.0)	— (21.0)
24,0 (80)	8,6 (18.9)	9,4 (20.8)	9,4 (20.8)	9,2 (20.2)	9,1 (19.9)
30,0 (100)		7,2 (15.6)	6,8 (14.7)	6,5 (14.1)	6,4 (13.7)
36,0 (120)			5,0 (10.7)	4,7 (10.2)	4,5 (9.7)
42,0 (140)				3,4 (7.4)	3,2 (7.0)
48,0 (160)					2,3 (—)
52,0 (175)					
56,0 (185)					

Jib 15,2 m (50 ft)

Boom m (ft)	27,4 (90)	36,6 (120)	48,8 (160)	54,9 (180)	61,0 (200)
Radius					
10,0 (30)	9,0 (—)				
12,0 (40)	9,0 (20.0)	9,0 (—)			
14,0 (50)	9,0 (20.0)	9,0 (20.0)	9,0 (20.0)		
18,0 (60)	9,0 (20.0)	9,0 (20.0)	9,0 (20.0)	9,0 (20.0)	9,0 (20.0)
24,0 (80)	7,7 (16.8)	8,9 (19.5)	9,0 (20.0)	9,0 (20.0)	8,9 (19.7)
30,0 (100)	6,2 (13.6)	7,2 (15.7)	6,8 (14.7)	6,5 (14.1)	6,3 (13.6)
36,0 (120)	5,2 (11.5)	5,5 (11.9)	5,0 (10.8)	4,7 (10.2)	4,5 (9.8)
42,0 (140)		4,3 (9.3)	3,8 (8.2)	3,5 (7.5)	3,3 (7.1)
48,0 (160)			2,9 (6.2)	2,5 (5.4)	2,2 (4.7)
52,0 (175)			2,3 (4.9)	1,9 (4.0)	1,6 (3.3)
58,0 (185)			1,8 (4.1)		

Jib 15,2 m (50 ft)

Boom m (ft)	27,4 (90)	36,6 (120)	48,8 (160)	54,9 (180)	61,0 (200)
Radius					
10,0 (30)					
12,0 (40)					
14,0 (50)					
18,0 (60)	5,1 (11.4)	5,1 (11.4)	5,1 (—)		
24,0 (80)	5,1 (11.2)	5,1 (11.2)	5,1 (11.4)	5,1 (11.4)	5,1 (11.4)
30,0 (100)	4,4 (9.8)	4,8 (10.6)	5,1 (11.4)	5,1 (11.4)	5,1 (11.4)
36,0 (120)		4,3 (9.6)	4,7 (10.4)	4,9 (10.8)	4,9 (10.6)
42,0 (140)			4,0 (8.6)	3,7 (8.1)	3,6 (7.7)
48,0 (160)				2,7 (5.9)	2,5 (5.3)
52,0 (175)					1,9 (3.8)
58,0 (185)					

Meets ANSI B30.5 Requirements - Capacities do not exceed 75% of static tipping load.
NOTICE: This capacity chart is for reference only and must not be used for lifting purposes.

fixed jib load charts

Model 12000 Series 2 Liftcrane Fixed Jib Capacities
No. 12000 Fixed Jib on Main Boom

34 000 kg (75,000 lb) Counterweight

360° Rating — **kg (lb) x 1 000**

10° Offset

Jib 21,3 m (70 ft)	Boom m (ft)	27,4 (90)	36,6 (120)	48,8 (160)	54,9 (180)	61,0 (200)
	Radius					
	12,0 (45)	7,1 (15.7)				
	18,0 (60)	6,7 (14.8)	6,8 (15.1)	6,9 (15.4)	7,0 (15.6)	7,1 (15.7)
	22,0 (75)	6,4 (13.9)	6,6 (14.4)	6,7 (14.8)	6,8 (15.0)	6,9 (15.1)
	26,0 (90)	5,5 (11.5)	6,3 (13.3)	6,5 (14.3)	6,6 (14.4)	6,7 (14.6)
	32,0 (110)	4,4 (9.4)	5,1 (10.9)	6,0 (12.7)	6,0 (12.3)	5,8 (11.9)
	38,0 (130)	3,7 (7.9)	4,3 (9.2)	4,7 (9.7)	4,4 (9.1)	4,2 (8.6)
	44,0 (145)	3,2 (7.1)	3,7 (8.2)	3,6 (7.9)	3,3 (7.2)	3,1 (6.8)
	50,0 (170)		3,2 (6.8)	2,7 (5.6)	2,4 (4.7)	2,0 (4.1)
	54,0 (180)			2,2 (4.8)	1,8 (3.9)	
	56,0 (190)			2,0 (4.0)	1,6 (—)	
	60,0 (200)			1,6 (3.3)		

30° Offset

Jib 21,3 m (70 ft)	Boom m (ft)	27,4 (90)	36,6 (120)	48,8 (160)	54,9 (180)	61,0 (200)
	Radius					
	12,0 (45)					
	18,0 (60)	3,6 (—)				
	22,0 (75)	3,6 (8.1)	3,6 (8.1)			
	26,0 (90)	3,5 (7.6)	3,6 (8.1)	3,6 (8.1)	3,6 (8.1)	3,6 (8.1)
	32,0 (110)	3,0 (6.5)	3,3 (7.0)	3,5 (7.6)	3,6 (7.8)	3,6 (8.0)
	38,0 (130)	2,7 (—)	2,9 (6.3)	3,1 (6.9)	3,2 (7.1)	3,3 (7.3)
	44,0 (145)		2,6 (5.9)	2,9 (6.4)	3,0 (6.6)	3,0 (6.8)
	50,0 (170)			2,6 (5.9)	2,7 (5.5)	2,5 (4.9)
	54,0 (180)				2,1 (4.5)	1,8 (3.9)
	56,0 (190)					1,6 (—)
	60,0 (200)					

Meets ANSI B30.5 Requirements - Capacities do not exceed 75% of static tipping load.
NOTICE: This capacity chart is for reference only and must not be used for lifting purposes.

luffing jib range diagram

No. 12000 Luffing Jib on Luffing Boom

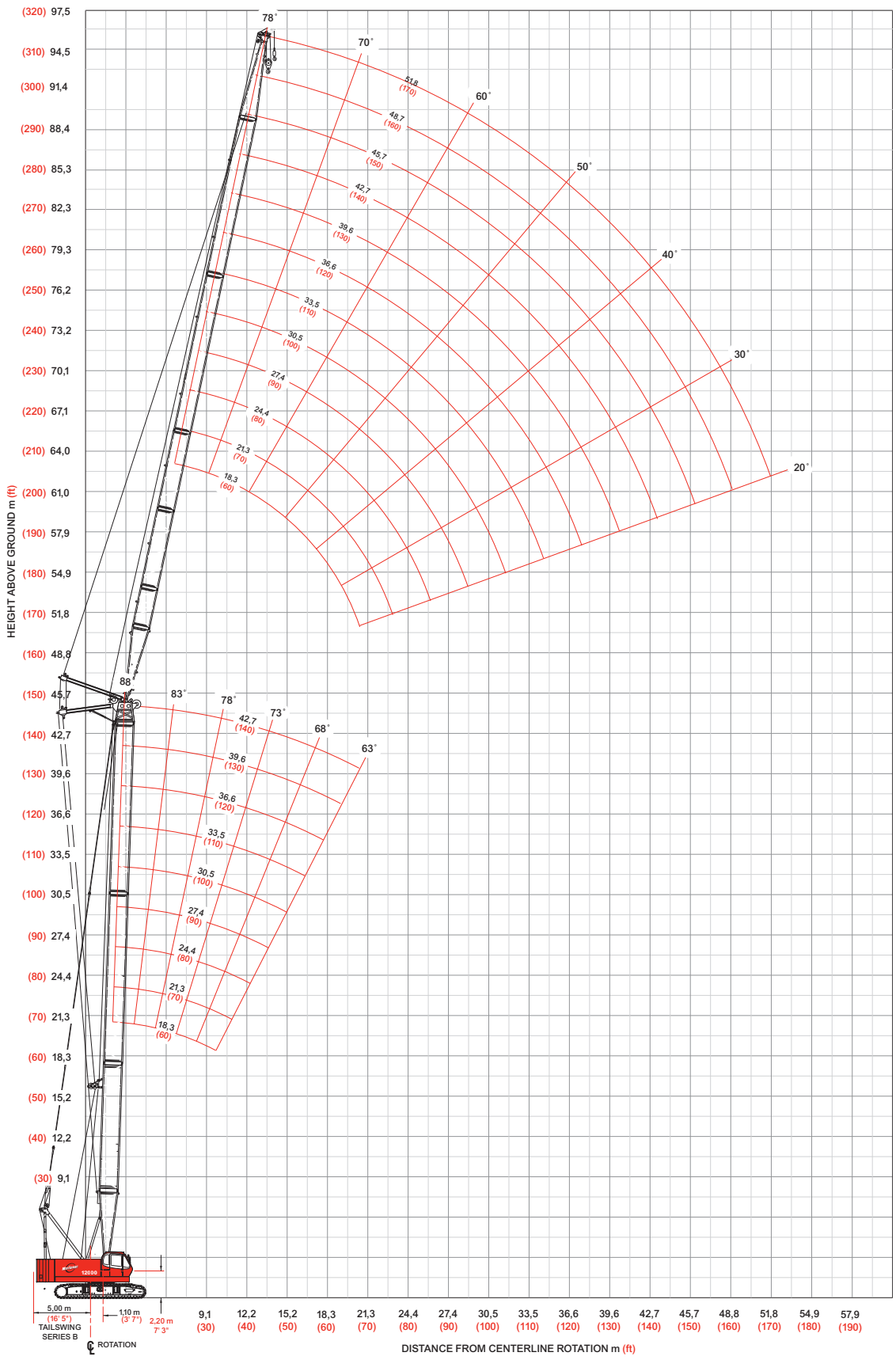

luffing jib load charts

Model 12000 Series 2 Liftcrane Luffing Jib Capacities
No. 12000 Luffing Jib on Luffing Boom

34 000 kg (75,000 lb) Counterweight

360° Rating — **kg (lb) x 1 000**

88° Boom Angle

Luffing Jib Length 18,3 m (60 ft)

Boom m (ft)	18,2 (60)	24,4 (80)	30,5 (100)	36,6 (120)	45,7 (150)
Radius					
7,9 (26)	36,2 (80.0)	— (80.0)			
9,0 (30)	31,9 (69.3)	31,9 (69.3)	31,9 (69.3)	31,9 (69.3)	19,5 (42.5)
10,0 (36)	28,8 (57.7)	28,7 (57.7)	28,7 (57.7)	28,7 (57.7)	17,9 (36.4)
14,0 (45)	20,4 (46.2)	20,5 (46.2)	20,5 (46.2)	20,5 (46.2)	12,9 (29.1)
18,0 (65)	14,1 (—)	14,4 (26.9)	14,6 (27.3)	14,8 (27.6)	9,5 (18.3)
20,0 (80)	11,2 (—)	11,3 (—)	11,5 (—)	11,8 (—)	7,9 (—)
24,0 (80)					
30,0 (100)					
36,0 (120)					
44,0 (145)					

Luffing Jib Length 30,5 m (100 ft)

Boom m (ft)	18,2 (60)	24,4 (80)	30,5 (100)	36,6 (120)	45,7 (150)
Radius					
7,9 (26)					
9,0 (30)					
10,0 (36)	— (57.7)				
14,0 (45)	20,5 (46.2)	20,5 (46.2)	20,5 (46.2)	20,5 (46.2)	12,6 (28.4)
18,0 (65)	14,7 (28.0)	15,0 (28.4)	15,2 (28.9)	15,4 (29.1)	9,6 (19.0)
24,0 (80)	9,4 (20.3)	9,4 (20.3)	9,5 (20.5)	9,6 (20.7)	6,6 (14.3)
30,0 (100)	6,4 (13.7)	6,4 (13.7)	6,4 (13.7)	6,4 (13.7)	4,5 (9.7)
32,0 (120)			5,4 (—)	5,5 (—)	3,9 (—)
36,0 (120)					
44,0 (145)					

Luffing Jib Length 39,6 m (130 ft)

Boom m (ft)	18,2 (60)	24,4 (80)	30,5 (100)	36,6 (120)
Radius				
14,0 (45)	20,7 (46.2)	20,7 (46.2)	20,7 (46.2)	
16,0 (55)	17,7 (36.8)	17,9 (37.5)	17,9 (37.5)	17,1 (36.4)
22,0 (75)	10,9 (22.7)	11,0 (22.9)	11,2 (23.1)	11,3 (23.4)
28,0 (95)	7,3 (15.2)	7,4 (15.4)	7,4 (15.4)	7,5 (15.7)
34,0 (115)	5,0 (10.6)	5,1 (10.6)	5,1 (10.6)	5,1 (10.8)
40,0 (130)	3,4 (8.2)	3,4 (8.2)	3,4 (8.2)	3,4 (8.2)
44,0 (150)				
50,0 (165)				
52,0 (175)				
56,0 (190)				

Luffing Jib Length 51,8 m (170 ft)

Boom m (ft)	18,2 (60)	24,4 (80)	30,5 (100)	36,6 (120)
Radius				
14,0 (45)				
16,0 (55)	— (30.0)	— (30.2)		
22,0 (75)	10,3 (21.6)	10,4 (21.8)	10,4 (22.0)	10,6 (22.3)
28,0 (95)	6,8 (14.1)	6,9 (14.3)	6,9 (14.3)	7,0 (14.6)
34,0 (115)	4,6 (9.7)	4,6 (9.7)	4,7 (9.7)	4,7 (9.7)
40,0 (130)	3,2 (7.3)	3,2 (7.3)	3,2 (7.3)	2,6 (6.2)
44,0 (150)	2,6 (4.9)	2,6 (4.0)	1,6 (—)	
50,0 (165)	— (2.2)			
52,0 (175)				
56,0 (190)				

Meets ANSI B30.5 Requirements - Capacities do not exceed 75% of static tipping load.
NOTICE: This capacity chart is for reference only and must not be used for lifting purposes.

Model 12000 Series 2 Liftcrane Luffing Jib Capacities
No. 12000 Luffing Jib on Luffing Boom

34 000 kg (75,000 lb) Counterweight

360° Rating — **kg (lb) x 1 000**

73° Boom Angle

Luffing Jib Length 18,3 m (60 ft)

Boom m (ft)	18,2 (60)	24,4 (80)	30,5 (100)	36,6 (120)	45,7 (150)
Radius					
16,0 (55)	— (35.9)				
20,0 (65)	13,0 (29.1)	12,4 (27.6)			
22,0 (75)	11,5 (24.0)	11,0 (23.1)	10,4 (22.3)	— (20.3)	
26,0 (85)		8,5 (19.6)	8,4 (18.7)	8,0 (17.9)	6,9 (15.4)
28,0 (95)			7,4 (—)	7,2 (15.2)	6,6 (13.9)
32,0 (105)					5,3 (11.9)
34,0 (115)					
38,0 (125)					
40,0 (135)					
42,0 (140)					

Luffing Jib Length 30,5 m (100 ft)

Boom m (ft)	18,2 (60)	24,4 (80)	30,5 (100)	36,6 (120)	45,7 (150)
Radius					
16,0 (55)					
20,0 (65)					
22,0 (75)					
26,0 (85)	8,8 (19.6)	8,1 (17.9)			
28,0 (95)	7,9 (16.8)	7,5 (15.9)	6,9 (15.0)	— (13.0)	
32,0 (105)	6,6 (14.6)	6,2 (13.7)	5,8 (13.0)	5,4 (12.1)	4,2 (9.3)
34,0 (115)	5,9 (12.8)	5,6 (11.9)	5,3 (11.2)	4,9 (10.4)	4,1 (9.0)
38,0 (125)		4,7 (—)	4,5 (9.9)	4,1 (9.0)	3,5 (7.7)
40,0 (135)				3,8 (7.9)	3,1 (6.6)
42,0 (140)					2,8 (6.2)

Luffing Jib Length 39,6 m (130 ft)

Boom m (ft)	18,2 (60)	24,4 (80)	30,5 (100)	36,6 (120)
Radius				
28,0 (95)	— (15.2)			
32,0 (105)	6,3 (13.9)	5,8 (13.0)	— (11.2)	
34,0 (115)	5,7 (12.1)	5,3 (11.2)	5,0 (10.6)	4,2 (9.3)
38,0 (125)	4,8 (10.6)	4,5 (9.9)	4,2 (9.3)	3,7 (8.2)
40,0 (135)	4,4 (9.3)	4,1 (8.6)	3,8 (7.9)	3,4 (7.1)
44,0 (145)	3,7 (8.2)	3,5 (7.7)	3,1 (6.8)	2,8 (6.2)
46,0 (155)		3,2 (—)	2,8 (6.0)	2,5 (5.3)
48,0 (160)			2,6 (—)	2,3 (4.9)
52,0 (175)				
56,0 (185)				

Luffing Jib Length 51,8 m (170 ft)

Boom m (ft)	18,2 (60)	24,4 (80)	30,5 (100)	36,6 (120)
Radius				
28,0 (95)				
32,0 (105)				
34,0 (115)	— (10.1)			
38,0 (125)	4,3 (9.5)	3,8 (8.4)	— (6.6)	
40,0 (135)	3,9 (8.4)	3,6 (7.5)	2,9 (6.6)	2,2 (4.9)
44,0 (145)	3,2 (7.1)	2,9 (6.4)	2,5 (5.5)	2,1 (4.6)
46,0 (155)	2,9 (6.2)	2,6 (5.5)	2,2 (4.6)	1,8 (4.0)
48,0 (160)	2,7 (5.7)	2,4 (5.1)	1,9 (4.2)	1,7 (3.5)
52,0 (175)	2,2 (4.6)	1,8 (4.0)	1,5 (3.3)	
56,0 (185)	1,7 (—)	1,5 (3.3)		

Meets ANSI B30.5 Requirements - Capacities do not exceed 75% of static tipping load.
NOTICE: This capacity chart is for reference only and must not be used for lifting purposes.

luffing jib load charts

Model 12000 Series 2 Liftcrane Luffing Jib Capacities
No. 12000 Luffing Jib on Luffing Boom

34 000 kg (75,000 lb) Counterweight

360° Rating — **kg (lb) x 1 000**

63° Boom Angle

Luffing Jib Length 18,3 m (60 ft)

Boom m (ft)	18,2 (60)	24,4 (80)	30,5 (100)	36,6 (120)	45,7 (150)
Radius					
22,0 (75)	— (22.5)				
24,0 (80)	9,7 (21.2)				
26,0 (85)	8,6 (19.4)	7,9 (17.6)			
28,0 (95)		7,4 (15.7)	— (13.7)		
32,0 (105)			5,5 (12.3)	4,7 (10.4)	
34,0 (115)				4,6 (9.7)	— (6.4)
38,0 (125)					2,9 (6.4)
40,0 (135)					
44,0 (145)					
46,0 (150)					

Luffing Jib Length 30,5 m (100 ft)

Boom m (ft)	18,2 (60)	24,4 (80)	30,5 (100)	36,6 (120)
Radius				
22,0 (75)				
24,0 (80)				
26,0 (85)				
28,0 (95)				
32,0 (105)	6,0 (13.4)			
34,0 (115)	5,5 (11.7)	4,8 (10.6)		
38,0 (125)	4,7 (10.4)	4,2 (9.3)	3,5 (7.9)	
40,0 (135)		3,9 (8.2)	3,3 (7.1)	2,4 (5.3)
44,0 (145)			2,8 (6.2)	2,2 (4.9)
46,0 (150)				2,0 (4.4)

Luffing Jib Length 39,6 m (130 ft)

Boom m (ft)	18,2 (60)	24,4 (80)	30,5 (100)
Radius			
36,0 (120)	— (9.7)		
38,0 (125)	4,4 (9.7)		
40,0 (130)	4,0 (9.0)	3,2 (7.1)	
42,0 (140)	3,6 (7.9)	3,1 (6.8)	— (4.6)
44,0 (150)	3,4 (7.1)	2,9 (6.0)	2,0 (4.6)
48,0 (160)	2,9 (—)	2,4 (5.1)	1,9 (4.0)
50,0 (170)		2,1 (—)	1,7 (3.3)
52,0 (175)			1,5 (3.1)
54,0 (180)			
58,0 (190)			

Luffing Jib Length 51,8 m (170 ft)

Boom m (ft)	18,2 (60)
Radius	
36,0 (120)	
38,0 (125)	
40,0 (130)	
42,0 (140)	
44,0 (150)	— (5.1)
48,0 (160)	2,2 (4.9)
50,0 (170)	2,0 (4.0)
52,0 (175)	1,7 (3.7)
54,0 (180)	1,6 (3.3)
58,0 (190)	— (2.9)

Meets ANSI B30.5 Requirements - Capacities do not exceed 75% of static tipping load.
NOTICE: This capacity chart is for reference only and must not be used for lifting purposes.

Boom:
Welded lattice construction using tubular, high-tensile steel chords with pin connections between sections.
Basic boom length: 15,2 m (50 ft)
Max. boom length: 30,5 m (100 ft)
Limit on clamshell bucket weight: 2 100 kg (4,600 lbs)

Boom Component Chart

Boom length ft (m)	Boom arrangement
15,2 (50)	Base-Tip
18,3 (60)	Base-A-Tip
21,3 (70)	Base-A-A-Tip, Base-B-Tip
24,4 (80)	Base-A-B-Tip
27,4 (90)	Base-A-A-B-Tip, Base-B-B-Tip, Base-C-Tip
30,5 (100)	Base-A-B-B-Tip, Base-A-C-Tip

Base = 7,6 m (25 ft)
Insert: A = 3,05 m (10 ft)
B = 6,10 m (20 ft)
C = 12,2 m (40 ft)
Tip = 7,2 m (25 ft)

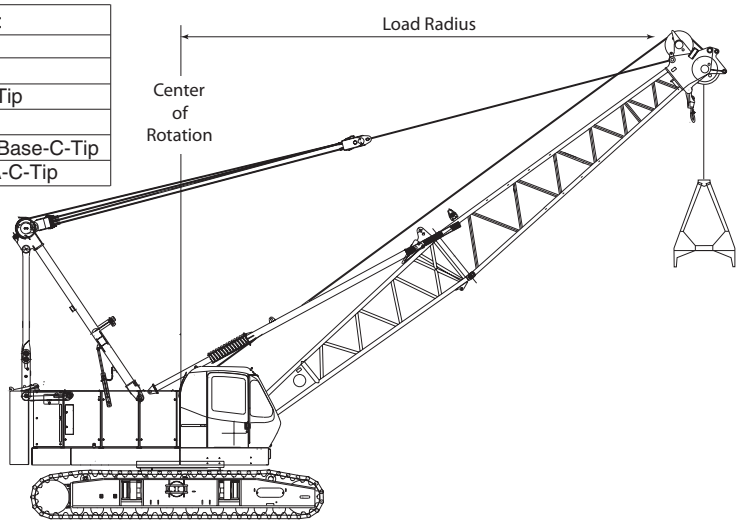

1. Figures represent maximum allowable capacity, and assume level ground and ideal working conditions.
2. Capacities are calculated at 66% of the minimum tipping loads.
3. Capacities are maximum recommended by PCSA Standard #4. Allowances must be made by the user for such unfavorable conditions as a soft or uneven supporting surface, rapid cycle operations, or bucket suction.
4. The combined weight of the bucket and load must not exceed these capacities.
5. Boom length for clamshell operation should not exceed 30,5 m (100 ft).

Clamshell Capacities

10 000 kg (22,050 lb) Counterweight (One Upper Counterweight, Crawlers Extended)

kg (lb) x 1 000

Boom m (ft)	15,2 (50)	18,3 (60)	21,3 (70)	24,4 (80)	27,4 (90)	30,5 (100)
Radius						
7,0 (22)	10,0 (25.0)					
8,0 (26)	10,0 (25.0)					
9,0 (30)	10,0 (25.0)	10,0 (25.0)				
10,0 (34)	10,0 (25.0)	9,7 (25.0)	9,7 (25.0)			
14,0 (45)	10,0 (23.1)	7,8 (22.9)	7,8 (22.7)	7,8 (22.5)	7,8 (21.6)	
15,0 (50)		6,6 (19.8)	6,6 (19.6)	6,6 (19.4)	6,6 (19.2)	6,6 (18.5)
17,0 (55)		5,7 (12.5)	5,7 (17.2)	5,7 (17.0)	5,7 (16.8)	5,7 (16.5)
18,0 (60)			5,0 (15.2)	5,0 (15.0)	5,0 (14.8)	5,0 (14.6)
21,0 (70)				4,4 (11.9)	4,3 (11.7)	4,2 (11.5)
24,0 (80)					— (9.5)	— (9.3)
25,0 (85)						— (8.4)
27,0 (90)						— (7.7)

Manitowoc Crane CARE

Crane CARE is Manitowoc's comprehensive service and support program. It includes classroom and on-site training, prompt parts availability, expert field service, technical support and documentation — for every one of the more than 7,000 Manitowoc cranes currently in use throughout the world.

That's commitment you won't find anywhere else.

That's **Crane CARE**.

Service Training

Manitowoc specialists work with you in our training center and in the field to make sure you know how to get maximum performance, reliability and life from your cranes.

Manitowoc Cranes Technical Training Center provides valuable multi-level training, which is available for all models and attachments, in the following format:

• **Basic** – Provides technicians with the basic skills required in our Level I and II classes covering hydraulic and electrical theory and schematics, pump, motor, control, and LMI operation, and the use of meters and gauges.

• **Level 1** – This model-specific class covers theory and offers hands-on training and trouble shooting for all crane systems.

• **Level 2** – This model-specific class provides in depth coverage of all crane systems and components, and advanced troubleshooting of simulated faults.
(Requires Level 1.)

• **Level 3/Master** – Covering all EPIC models and the 4100W, this class stresses high level system knowledge and trouble shooting of simulated faults.
(Requires Level 2.)

Parts Availability

Genuine Manitowoc replacement parts are accessible through your distributor 24 hours a day, 7 days a week, 365 days a year.

Service Interval Kits
Provides all the parts required by Manitowoc's Preventative Maintenance Checklist.

Hydraulic Filter Kit

Consists of the following:
- Filter Element - Hydraulic in Tank (4)

Cummins Model QSZ15-C600 Diesel

– Service Interval Kits

200 Hour Kit
Consists of the following:

Engine
- Filter Oil (1)
- Filter Water (1)
- Filter Fuel (1)

1,000 Hour Kit
Consists of the following:

Engine
- Filter Air Cleaner - Primary (1)
- Filter Oil (1)
- Filter Water (14)
- Filter Fuel (1)

Hydraulic
- Filter Element - Hydraulic in Tank (4)
- Element - Hydraulic Tank Breather (1)

2,000 Hour Kit
Consists of the following:

Engine
- Filter, Air Cleaner - Primary (1)
- Filter, Air Cleaner - Safety (1)
- Filter, Oil (1)
- Filter, Water (1)
- Filter, Fuel (1)
- Ether, (Bottle) (1)
- Sensor, Coolant Level (10)
- Belt, Fan (1)
- Belt, Alternator (set of two) (1)
- Filter, Element (1)

Hydraulic
- Filter Element - No substitutions allowed
- Filter - Hydraulic In-Tank Suction (4)

Kit, Engine Coolant Additive (SCA) Test (1)
Kit, Seal (for hydraulic in tank filter) (1)
Seal, Radial (for air cleaner) (1)

Hydraulic Test Kit
Protect your investment by demanding Genuine Manitowoc Parts Service Kits. The Hydraulic Service Kit consist of the following:
- All hydraulic fittings to access all pressures and flows.
- Hydraulic flow meters and pressure gauges to record hydraulic data.
- Electrical "Break out" harnesses to access voltages on all electrical circuits on all machines.
- Fluke Digital volt ohm meter, as used in all Manitowoc service literature.

Hydraulic Test Kit with case
The above kit plus a custom heavy-duty carrying case.

U.S. Standard Tools Kit
All standard tools needed to properly maintain and service your crane. (Does not include torque wrench.)

Field Service

Factory-trained service experts are always ready to help maintain your crane's peak performance.

For a worldwide listing of dealer locations, please consult our website at: **www.manitowoccranegroup.com**

Technical Support

Manitowoc's dealer network and factory personnel are available 24 hours a day, 7 days a week, 365 days a year to answer your technical questions and more, with the help of computerized programs that simplify crane selection, lift planning, and ground-bearing calculations.

For a worldwide listing of dealer locations, please consult our website at: **www.manitowoccranegroup.com**

Technical Documentation

Manitowoc has the industry's most extensive documentation, and the easiest to understand, available in major languages and formats that include print, disk and videotape.

Additional copies available through your Authorized Manitowoc Distributor.

- Crane Operator's Manual
- Crane Parts Manual
- Crane Capacity Manual
- Crane Vendor Manual
- Service Manual (EPIC)
- Luffing Jib Operator's/Parts Manual
- Capacity Chart Manual - Attachments

CD rom versions of the Operator's and Parts Manuals are shipped with each crane.
Also available are the following CDs:

- Crane CARE Owner CD –
- Ground Bearing Pressure Estimator CD
- Crane Selection and Planning Software (CompuCRANE©)
- EPIC® Crane Library CD consisting of capacity charts, range diagrams, wire rope specifications, travel specifications, crane weights, counterweight arrangements, luffing jib raising procedures, operating range diagrams, drum and lagging charts, boom rigging drawings, jib rigging drawings, outline dimensions and wind condition charts.

Available from your Authorized Manitowoc Cranes Distributor, these VHS videos are available in NTSC, PAL and SECAM formats.

- Your Capacity Chart Video
- Respect the Limits Video
- Crane Safety Video
- Boom Inspection/Repair Video

Crane CARE Package
Manitowoc has assembled all of the available literature, CD's and videos listed above plus several Manitowoc premiums into one complete Crane CARE Package.

Regional Headquarters

Americas

Manitowoc, Wisconsin, USA
Tel: +1 920 684 6621
Fax: +1 920 683 6278

Shady Grove, Pennsylvania, USA
Tel: +1 717 597 8121
Fax: +1 717 597 4062

Europe, Middle East, Africa

Ecully, France
Tel: +33 472 18 2020
Fax: +33 472 18 2000

Asia – Pacific

Shanghai, China
Tel: +86 21 51113579
Fax: +86 21 51113578

Singapore
Tel: +65 6264 1188
Fax: +65 6862 4142

Regional Offices

Americas

Brazil
Alphaville
Tel: +55 11 4688 2716
Fax: +55 11 4191 1471

Mexico
Monterrey
Tel: +52 81 8124 0128
Fax: +52 81 8124 0129

Europe, Middle East, Africa

Algeria
Hydra
Tel: +21 3 21 48 1173
Fax: +21 3 21 48 1454

Czeck Republic
Netvorice
Tel: +420 317 78 9313
Fax: +420 317 78 9314

France
Baudemont
Tel: +33 385 28 2589
Fax: +33 385 28 0430

Cergy
Tel: +33 130 31 3150
Fax: +33 130 38 6085

Decines
Tel: +33 472 81 5000
Fax: +33 472 81 5010

Germany
Langenfeld
Tel: +49 21 73 8909-0
Fax: +49 21 73 8909 30

Hungary
Budapest
Tel: +36 13 39 8622
Fax: +36 13 39 8622

Italy
Parabiago
Tel: +390 331 49 3311
Fax: +390 331 49 3330

Netherlands
Breda
Tel: +31 76 578 3999
Fax: +31 76 578 3978

Poland
Warsaw
Tel: +48 22 843 3824
Fax: +48 22 843 3471

Portugal
Alfena
Tel: +351 229 69 8840
Fax: +351 229 69 8848

Lisbon
Tel: +351 212 109 340
Fax: +351 212 109 349

Russia
Moscow
Tel: +7 495 641 2359
Fax: +7 495 641 2358

U.A.E.
Dubai
Tel: +971 4 3381 861
Fax: +971 4 3382 343

U. K.
Middlesex
Tel: +44 1 895 43 0053
Fax: +44 1 895 45 9500

Sunderland
Tel: +44 191 522 2000
Fax: +44 191 522 2052

Asia – Pacific

Australia
Melbourne
Tel: +61 3 9 336 1300
Fax: +61 3 9 336 1322

Sydney
Tel: +61 2 9 896 4433
Fax: +61 2 9 896 3122

China
Beijing
Tel: +86 10 58674761
Fax: +86 10 58674760

Xi'an
Tel: +86 29 87891465
Fax: +86 29 87884504

Korea
Seoul
Tel: +82 2 3439 0400
Fax: +82 2 3439 0405

Philippines
Makati City
Tel: +63 2 844 9437
Fax: +63 2 844 4712

Factories

U.S.A.
Manitowoc
Shady Grove

Brazil
Alphaville

France
Charlieu
La Clayette
Moulins

India
Calcutta
Puna

Italy
Niella Tanaro

Germany
Wilhelmshaven

Portugal
Fânzeres

China
Zhangjiagang

Constant improvement and engineering progress make it necessary that we reserve the right to make specification, equipment and price changes without notice. Illustrations shown may include optional equipment and accessories, and may not include all standard equipment.

Manitowoc Crane Group

www.manitowoccranegroup.com

©2007 MANITOWOC 0907-12000-PG-US-E