SPECIFICATIONS

MANTIS® 8012

40 TON TELE-BOOM CRAWLER CRANE

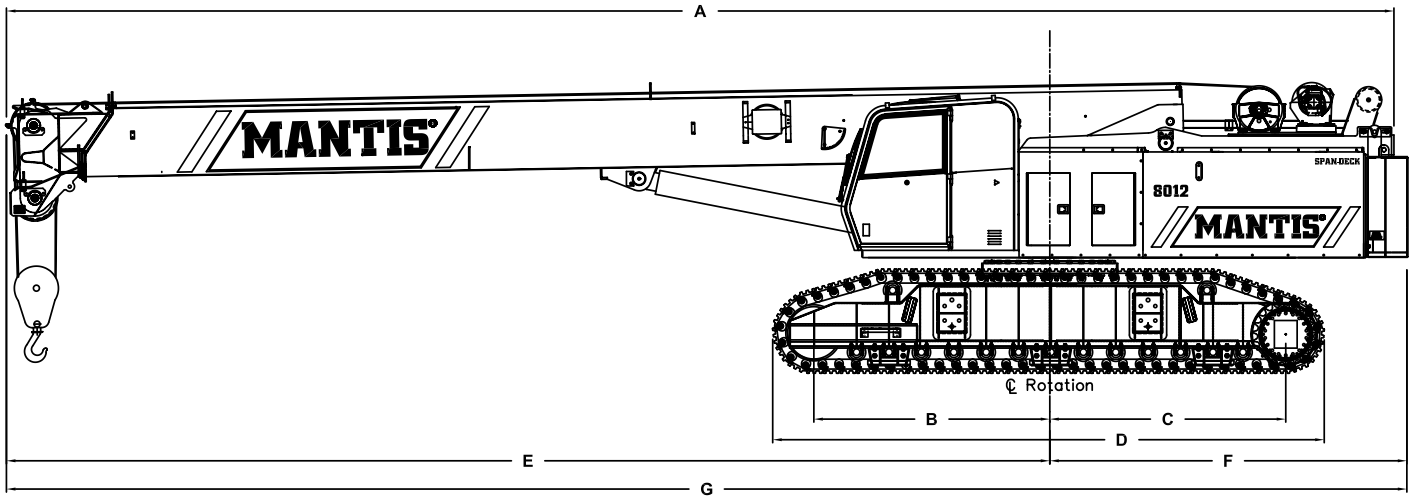

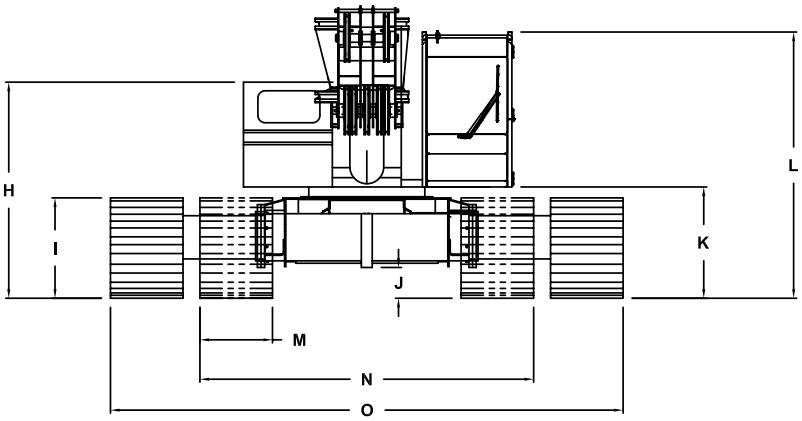

PRINCIPAL DIMENSIONS

A	Length (Counterweight Removed)	48 ft 2 in (14.72 m)
B	CL Front Track Drive to CL Rotation	8 ft 2 in (2.49 m)
C	CL Rear Track Drive to CL Rotation	8 ft 2 in (2.49 m)
D	Track Length	19 ft 0 in (5.79 m)
E	Boom Length to CL Rotation	35 ft 11 in (10.95 m)
F	Tailswing	12 ft 6 in (3.81 m)
G	Overall Length	48 ft 4 in (14.73 m)
H	Ground to Top of Engine Cover	8 ft 4 in (2.54 m)
I	Track Height	42 in (1.07 m)
J	Ground Clearance	13 in (330 mm)
K	Ground to Bottom of Cab	48 in (1.22 m)
L	Maximum Overall Height	10 ft 0 in (3.05 m)
M	Track Width	36 in (900 mm)
N	Overall Width (Tracks Retracted)	12 ft 0 in (3.66 m)
O	Overall Working Width	18 ft 4 in (5.59 m)

WIDTHS, WEIGHTS, AND GROUND PRESSURES*

Shoe Width	Overall Width		Area	Ground Pressure	Working Weight
	Retracted	Extended			
24 in (609 mm)	11 ft 0 in (3.35 m)	17 ft 2 in (5.23 m)	9,360 in² (6.04 m²)	8.9 psi (0.62 kg/cm²)	82,950 lb (37,630 kg)
30 in (762 mm)	11 ft 6 in (3.51 m)	17 ft 8 in (5.39 m)	11,700 in² (7.55 m²)	7.3 psi (0.51 kg/cm²)	84,934 lb (38,530 kg)
36 in (900 mm)	12 ft 0 in (3.66 m)	18 ft 4 in (5.59 m)	14,040 in² (9.06 m²)	6.2 psi (0.44 kg/cm²)	86,904 lb (39,420 kg)

** Crane equipped with: 80 ft boom, extension, jib, 30 ton hook block, and 7 ton headache ball*

SPECIFICATIONS

MANTIS® 8012

40 TON TELE-BOOM CRAWLER CRANE

STANDARD CRANE AND EQUIPMENT

Boom

The boom consists of three full power sections, 39 ft (11.89 m) retracted and 90 ft (27.43 m) fully extended. Maximum tip height is 96 ft (29.26 m).

Boom Telescoping & Elevating Systems

The elevating system features a single cylinder and counterbalance lock valves which provides boom elevations from -1° to 78°.

The telescoping system features a single double-acting hydraulic cylinder and counterbalance lock valves.

Boom Head

Five 15 in (381 mm) diameter cast nylon sheaves on heavy-duty roller bearings are mounted in the boom head.

Load Moment Indicator & Anti-Two Block[1]

Standard Rated Capacity Limiter and Anti-Two Block system includes audio and video warnings and control function shutdown. System's LCD screen provides a continuous electronic display of working boom length, boom angle, working load radius, tip height, parts-of-line (operator set), machine track configuration, relative load moment, maximum permissible load and actual load. The standard Work Area Definition audio and video warnings aid the operator in avoiding job-site obstructions by pre-setting and defining the work area. The anti-two block weight allows quick reeving of hook blocks.

SUPERSTRUCTURE

Frame

The frame is an all-steel, welded structure, precision machined to accept attachment of the boom and swing components.

Operator's Cab

The fully-enclosed, air conditioned all-steel modular cab includes a lockable swinging door, acoustical lining, anti-slip floor and tinted safety glass. Sliding windows are located in the cab door and cab boom side. A vent window is positioned in the rear of the cab. Grab bars and steps are appropriately located for easy access to the cab. Erectable swing barricades are attached to the superstructure. Rear view cameras are appropriately located as are work lights.

Standard cab accessories include a two-speed windshield wiper, top glass wiper, defroster, heater, circulating fan, adjustable hand and foot throttles, six-way adjustable fabric seat with headrest, seat belt, dome light, and a dry-chemical fire extinguisher.

Instrumentation

Dash instrumentation features a tachometer, voltmeter, oil pressure gauge, temperature gauge, hour meter and fuel gauge. Indicators are provided for crane level, load moment, drum rotation, air filter restriction, hydraulic oil temperature and filter restriction, engine oil pressure and temperature.

A termination switch is located in the seat and armrest and is capable of immediately disabling all hydraulic functions as the operator rises from the seat or it can be activated by lifting the left hand armrest.

Control

Two-way hydraulic joysticks mounted in the armrests of the operator's seat control swing, boom extend, main winch and boom hoist. Three two-way hydraulic foot pedals control the travel and swing service brake functions. Travel pedal hand levers are available as an option. A fourth pedal controls engine speed.

Counterweight

The single piece 10,000 lb (4,536 kg) counterweight can be removed and installed via a pendant attached to the boom.

Swing

The superstructure rotates 360° on an external gear shear ball slew bearing bolted to the superstructure and the carbody. The hydraulic swing drive powers the system and consists of a gear motor driving a planetary gear reducer with a shaft mounted pinion, providing infinitely variable speeds of up to 3 rpm.

Swing braking is achieved through a "failsafe", hydraulically released, spring applied, multi-disc brake which includes a foot applied service brake. Alternatively, the brake can be electrically actuated through a cab mounted switch into a "locked-on" (parking) mode. A two position house lock system is included. Regular lubrication of the bearing is achieved through a cab mounted grease applicator.

Fuel System

An 80 US gal (303 liter) tank is bolted to the superstructure. The fuel filtration system consists of an inline fuel/water separator as well as an engine mounted fuel filter.

Hydraulic System

The load sensing, open-loop hydraulic system is served by two variable volume pumps mounted in tandem. The pumps are horsepower limiting and pressure compensated providing a maximum output of 168 gpm (636 l/min) @ 2,200 rpm and maximum operating pressure of 4,850 psi (339.5 kg/cm²). An extra circuit is included for ready adaptation to hydraulic accessories.

The system includes two pilot operated valve banks that are pressure and flow compensated. The 300 US gal (1,136 liter) capacity hydraulic oil reservoir has a spin-on filler-breather cap, external sight gauge, clean-out access and a sump type drain. An air to oil remote mounted cooler provides oil cooling with thermostatically-controlled, electrically driven fans. Hydraulic oil filtering is achieved with two 5 micron full flow cartridge type filters designed to return in-tank with bypass protection and an electronic bypass indicator.

(System pressure test ports with quick disconnect fittings are provided for diagnostic purposes.)

SPECIFICATIONS

MANTIS® 8012

40 TON TELE-BOOM CRAWLER CRANE

MAIN HOIST

Planetary geared two-speed winch includes a bent axis, variable displacement hydraulic motor and a multi-disc internal brake. Wire Rope: 530 ft (162 m) 5/8 in rope (182.88 m ~ 16 mm rope) . Line pulls are not based on wire rope strength. Drum rotation indicator is standard.												
Rope Layer	Maximum Line Pull		No Load Line Speed		Full Load Line Speed		Pitch Diameter		Layer		Total	
1	17,500 lb	7,940 kg	384 ft/min	117.0 m/min	179 ft/min	54.6 m/min	11.4 in	288.9 mm	76 ft	23.2 m	76 ft	23.2 m
2	15,700 lb	7,120 kg	414 ft/min	126.2 m/min	193 ft/min	58.8 m/min	12.5 in	316.3 mm	83 ft	25.4 m	160 ft	48.7 m
3	14,300 lb	6,490 kg	433 ft/min	132.0 m/min	202 ft/min	61.6 m/min	13.5 in	343.6 mm	91 ft	27.6 m	250 ft	76.3 m
4	13,100 lb	5,940 kg	451 ft/min	137.5 m/min	210 ft/min	64.0 m/min	14.6 in	370.9 mm	98 ft	29.8 m	348 ft	106.1 m
5	12,100 lb	5,490 kg	482 ft/min	146.9 m/min	225 ft/min	68.6 m/min	15.7 in	398.3 mm	105 ft	32.0 m	453 ft	138.2 m
6	11,300 lb	5,130 kg	489 ft/min	149.0 m/min	228 ft/min	69.5 m/min	16.8 in	425.6 mm	112 ft	34.2 m	530 ft	161.5 m

AUXILIARY HOIST

Planetary geared single-speed winch includes a bent axis, variable displacement hydraulic motor and a multi-disc internal brake. Wire Rope: 350 ft (107 m) 5/8 in (16 mm) 6 x 37 EIPS, IWRC, RRL. Line pulls are not based on wire rope strength. Drum rotation indicator is standard.										
Rope Layer	Maximum Line Pull		Full Load Line Speed		Pitch Diameter		Layer		Total	
1	12,000 lb	5,440 kg	182 ft/min	55.5 m/min	10.4 in	263.5 mm	60 ft	18.2 m	60 ft	18.2 m
2	10,700 lb	4,850 kg	198 ft/min	60.4 m/min	11.5 in	290.9 mm	66 ft	20.1 m	126 ft	38.3 m
3	9,800 lb	4,450 kg	208 ft/min	63.4 m/min	12.5 in	318.2 mm	72 ft	22.0 m	198 ft	60.3 m
4	9,000 lb	4,080 kg	217 ft/min	66.1 m/min	13.6 in	345.5 mm	78 ft	23.9 m	276 ft	84.2 m
5	8,300 lb	3,760 kg	233 ft/min	71.0 m/min	14.7 in	372.9 mm	85 ft	25.8 m	361 ft	110.0 m

STANDARD ENGINE

Cummins QSB215 (U. S. EPA Tier 3)					
Noise Emissions: Top 96.3 dBa (excludes noise from intake, exhaust, cooling system and driven components)					
Type	6 Cylinder Water Cooled	Weight (Wet)	1056 lb (479 kg)	Aspiration	Turbocharged & Aftercooled
Displacement	360 cu in (5.9 l)	Oil Capacity	17.2 US quarts (16.3 l)	Air filter	Dry Type
Bore	4.02 in (102 mm)	Rated Horsepower	215 @ 2200 rpm	Electrical system	12 volt
Stroke	4.72 in (120 mm)	Peak Torque	692 ft/lb @ 1500 rpm	Alternator	100 amp

MACHINE WEIGHTS

STANDARD CRANE WITH 3 SECTION 90 ft (27.43 m) BOOM 1 PIECE COUNTERWEIGHT & 36 in (900 mm) TRACK SHOES	82,900 lb	37,600 kg
Crane less Counterweight & Track Frames	49,300 lb	22,360 kg
Counterweight	10,000 lb	4,540 kg
Track Frames, 2 pieces 11,800 lb (5,352 kg) each	23,600 lb	10,705 kg
OPTIONAL EQUIPMENT		
30 ft (9.14 m) Lattice Extension	1,700 lb	771 kg
20 ft (6.10 mm) Jib (connects to head of Lattice Extension ONLY)	700 lb	318 kg
Auxiliary Nose Sheave	210 lb	95 kg
12 ton (11 mt) Headache Ball	404 lb	183 kg
40 ton (36 mt) Hook Block	1,200 lb	544 kg
Auxiliary Winch with Standard Rope	685 lb	311 kg
Auger Ready Package	440 lb	200 kg
Complete Auger Package	1,520 lb	690 kg
60 in (1.52 m) Auger Kelly Bar	120 lb	54 kg
72 in (1.83 m) Auger Kelly Bar	140 lb	64 kg

** Deduction from Standard Crane Weight*

SPECIFICATIONS

MANTIS® 8012

40 TON TELE-BOOM CRAWLER CRANE

UNDERCARRIAGE

Carbody

The welded steel, box type carbody is fabricated with square axles to accept the crawler side frames. The top surface is precision machined to receive the swing bearing.

Side Frames

Two welded steel removable side frames are paired with a track group consisting of two top and thirteen bottom oil-filled & sealed rollers. Each frame includes an oil-filled, self-lubricating idler and spring type, track tensioning device. Standard track shoes are 36 in (900 mm) wide, 3-bar semi-grousers. Optional shoes are available in 24 in (609 mm) and 36 in (900 mm) widths flat pad and semi grouser configurations. 30 in flat pads are also available. The side frames extend and retract hydraulically and are electrically controlled from the cab.

Travel

Each side frame contains a pilot controlled, two-speed track drive. The drives are hydraulic piston motors which propel the crane at a low speed of 2.0 mph (3.2 km/hr) and at a high speed of 3.0 mph (4.8 km/hr).

The internal brake system is spring applied and automatically released upon actuation of the travel system.

The hydraulic travel system provides skid steering and track counter-rotation and achieves an unladen gradeability of 78%.

OPTIONAL EQUIPMENT

Boom Attachments

- **Boom Extension:** 30 ft (9.14 m), lattice type swingaway that stores alongside of the boom base section and can be used with or without the optional 20 ft (6.10 m) jib. Head contains two 19 in (483 mm) diameter high strength cast nylon sheaves mounted on heavy-duty roller bearings, reeving up to 2 parts of wire rope. With the extension deployed the maximum tip height is 126 ft (38.41 m).
- **Boom Jib:** 20 ft (6.10 m) lattice type swingaway, attaches to and stores alongside the extension and can only be used with the extension deployed. Offsets are at 15° & 30°. With jib and extension deployed the maximum tip height is 145 ft (44.20 m).
- **Auxiliary Nose Sheave:** quick reeve, single 19 in (483 mm) diameter high-strength, cast nylon sheave mounted on a heavy-duty roller bearing.
- **Wire Rope:** rotation resistant, (non-spin) Dyform-18 HSLR.
- **Headache Ball:** 12 ton (11 mt) ball includes a swivel hook with a safety latch.
- **Hook Block:** 40 ton (36 mt) hook block consists of four 19 in (483 mm) diameter sheaves mounted on heavy-duty roller bearings with a swivel hook and safety latch.

Hydraulic

- **Auger Ready Package:** includes hoses, fasteners and stowage bracket assembly mounted to the base section of the boom with a flow capability of 34 gpm (130 l/min).
- **Complete Auger Package:** adds a two speed auger motor/gear box and one 60 in (1.52 m) kelly bar to the Auger Ready Package.
- **Tool Circuit:** provides 6 gpm (23 l/min) and 12 gpm (45 l/min) at 2,500 psi (176 kg/cm²) through a 50 ft (15 240 mm) twin hose reel with quick disconnect fittings to operate open center tools.

Other Options

- **Free Fall Hoists:** all winches are available in free fall and controlled free fall configurations.
- **Crane Cab Access Walkway:** a pair of 54.5 in (1 384 mm) wide x 25 in (635 mm) deep walkways which attach to both the front and rear of the carbody and allow for easier egress and ingress to the operator's cab when the crane's upper rotating frame is not aligned front to rear.
- **Model WP750 Work Platform:** 36 in x 72 in (914 mm x 1 828 mm), all-steel, welded, two-person platform with a maximum capacity of 750 lb (340 kg). A test weight and boom head adapter are included in the package. Operation and control are by the crane operator from the cab. Radio (RF) controls to enable remote operation from the platform are available.

(See separate WP750 Specification for a complete description of standard and optional Work Platform equipment.)

[1]Load moment indicating and anti-two block systems are operator aids and must never be used in lieu of job site lift planning calculations by the operator which must take into account ground conditions, weather and all other environmental factors prevailing at the time of the lift. Prices and specifications are subject to change at any time without prior notice and are for factory installation at time of original manufacture. F.O.B Plant; Richlands, VA 24641. Illustrations and photographs may show optional equipment. Supercedes all previous issues. Please see www.mantiscranes.com for most current information.

LOAD CHARTS

MANTIS® 8012

40 TON TELE-BOOM CRAWLER CRANE

90 FT MAIN BOOM, 30 FT EXTENSION & 20 FT JIB

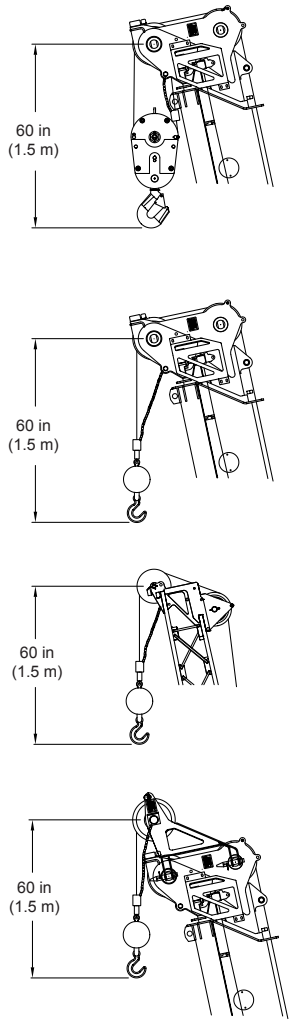

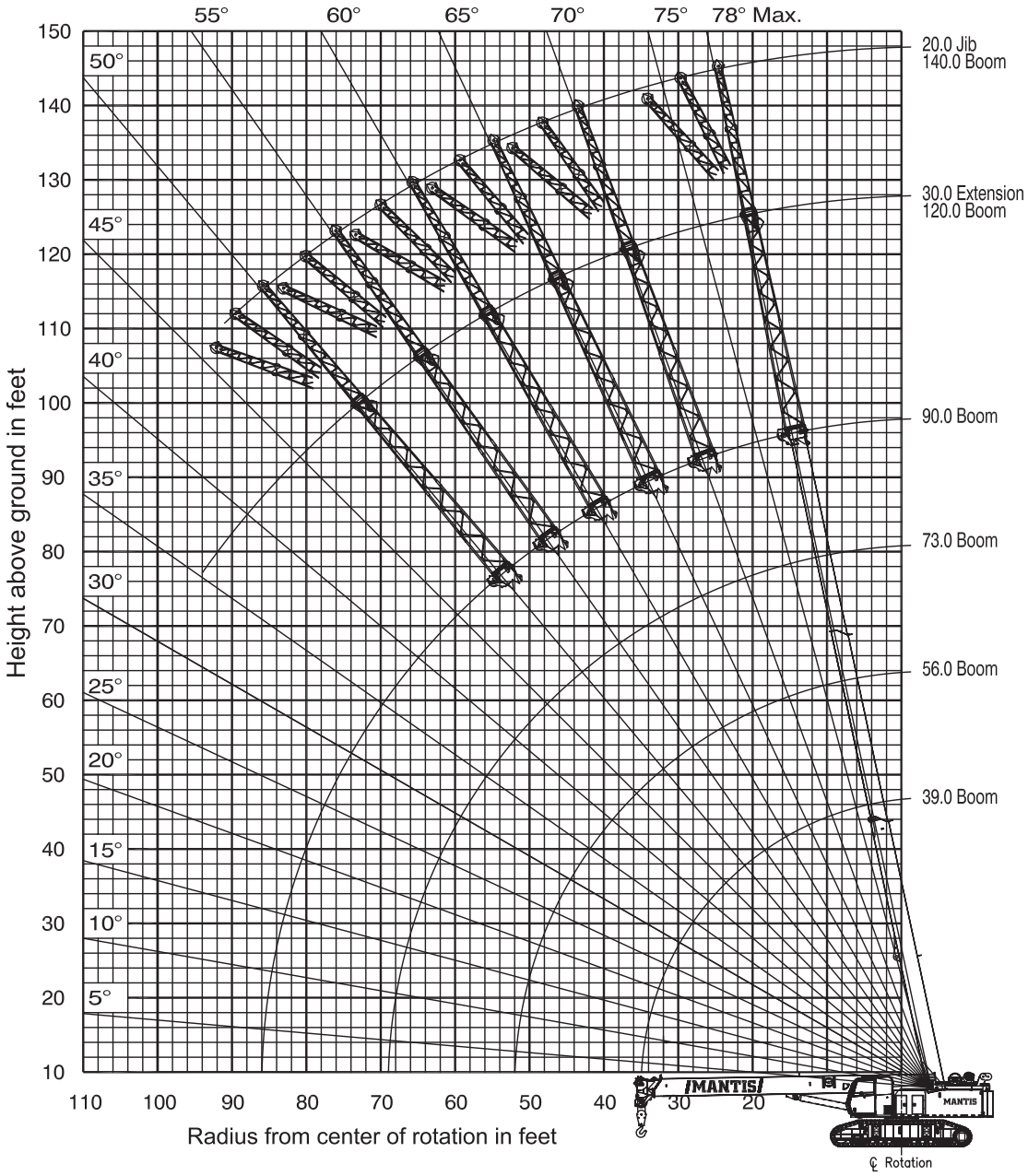

⚠ CAUTION ⚠

THESE CHART VALUES ARE ONLY A GUIDE AND MUST NOT BE USED TO OPERATE THE CRANE. USE ONLY THE IN CAB LOAD CHARTS AND OPERATOR'S MANUAL FURNISHED WITH THE CRANE.

LOAD CHARTS

MANTIS® 8012

40 TON TELE-BOOM CRAWLER CRANE

LIFTING CAPACITIES

IN THOUSANDS OF POUNDS; 360°, 75% OF TIPPING, FIRM & LEVEL GROUND

MAIN BOOM with TRACKS FULLY EXTENDED								
10,000 lb COUNTERWEIGHT								
RADIUS (ft)	MAIN BOOM LENGTH (ft)							RADIUS (ft)
	39.0	48.0	56.0	65.0	73.0	82.0	90.0	
10	80.0	41.5	40.0					10
	70.9°	74.4°	76.8°					
12	80.0	39.0	37.0	36.0				12
	67.7°	71.9°	74.7°	76.8°				
15	66.0	35.0	34.5	34.0	33.0	32.0		15
	62.8°	68.0°	71.5°	74.0°	75.9°	77.4°		
20	39.8	34.0	33.0	27.0	26.0	25.0	24.5	20
	53.9°	61.2°	65.9°	69.3°	71.8°	73.8°	75.4°	
25	26.6	27.0	27.0	26.0	25.0	24.0	20.0	25
	43.9°	53.9°	60.1°	64.4°	67.6°	70.1°	72.0°	
30	19.5	19.7	19.9	19.5	19.0	18.5	18.0	30
	31.3°	45.9°	53.9°	59.3°	63.3°	66.3°	68.6°	
35	14.9	15.2	15.4	15.5	15.6	15.6	15.7	35
	3.8°	36.4°	47.2°	53.9°	58.7°	62.3°	65.1°	
40		12.1	12.3	12.4	12.4	12.5	12.5	40
		23.7°	39.5°	48.1°	53.9°	58.2°	61.6°	
45			10.0	10.1	10.2	10.2	10.2	45
			30.3°	41.7°	48.9°	54.0°	57.8°	
50			8.2	8.3	8.4	8.5	8.5	50
			16.7°	34.3°	43.3°	49.4°	54.0°	
55				7.0	7.1	7.1	7.1	55
				25.0°	37.1°	44.5°	49.9°	
60				5.9	6.0	6.0	6.0	60
				8.4°	29.8°	39.2°	45.5°	
65					5.0	5.1	5.1	65
					20.1°	33.1°	40.8°	
70						4.3	4.3	70
						25.7°	35.5°	
75						3.7	3.7	75
						15.2°	29.5°	
80							3.1	80
							21.9°	
85							2.6	85
							9.4°	

** Capacity based on maximum obtainable boom angle.*
° Boom angles are stated in degrees.

⚠ CAUTION ⚠

THESE CHART VALUES ARE ONLY A GUIDE AND MUST NOT BE USED TO OPERATE THE CRANE. USE ONLY THE IN CAB LOAD CHARTS AND OPERATOR'S MANUAL FURNISHED WITH THE CRANE.

LOAD CHARTS

MANTIS® 8012

40 TON TELE-BOOM CRAWLER CRANE

LIFTING CAPACITIES

IN THOUSANDS OF POUNDS; 360°, 75% OF TIPPING, FIRM & LEVEL GROUND

MAIN BOOM with 10,000 lb COUNTERWEIGHT			
MAIN BOOM LENGTH (ft)			
RADIUS (ft)	39.0	39.1 to	RADIUS (ft)
10	70.0	40.0	10
12	50.0	36.0	12
14	39.0	33.0	14
16	31.5	31.5	16
18	26.0	26.0	18
20	22.0	22.0	20
22	19.0	19.0	22
24	16.5	16.5	24
26	14.4	14.4	26
28	12.7	12.7	28
30	11.2	11.2	30
32	10.1	10.1	32
34	9.1	9.1	34
36	8.4	8.4	36
38	7.6	7.6	38
40	6.9	6.9	40
42	6.3	6.3	42
44	5.9	5.9	44
46	5.4	5.4	46
48	4.9	4.9	48
50	4.5	4.5	50
52	4.2	4.2	52
54	3.8	3.8	54
56	3.5	3.5	56
58	3.2	3.2	58
60	2.9	2.9	60
60	2.3	2.3	60

30' EXTENSION & 20' JIB with TRACKS FULLY EXTENDED 10,000 lb COUNTERWEIGHT						
30' EXTENSION			20' JIB			
Boom Angle	Total Boom Length (ft)		Jib Offset Angles			Boom Angle
	69.0 to 112.0	> 112.0	0°	15°	30°	
78º	18.0	18.0	6.7	4.0	2.2	78º
75º	13.5	13.6	6.5	4.0	2.1	75º
72º	11.5	11.5	5.3	3.5	2.0	72º
70º	10.1	10.1	4.9	3.2	1.9	70º
68º	8.9	8.8	4.4	3.0	1.8	68º
65º	8.0	8.0	3.9	2.8	1.8	65º
62º	7.2	5.8	3.3	2.6	1.7	62º
60º	6.7	5.0	3.0	2.4	1.7	60º
58º	6.1	4.3	2.2	1.9	1.4	58º
55º	5.8	3.5	1.6	1.3	1.0	55º
52º	5.3	2.8	0.8	0.6	0.4	52º
50º	5.1	2.5	0.5	0.3	0.2	50º
48º	4.8	2.1				48º
45º	4.6	1.7				45º

ZERO DEGREE BOOM ANGLE MAXIMUM CAPACITY with TRACKS FULLY EXTENDED 10,000 lb COUNTERWEIGHT			
BOOM LENGTH (ft)	RADIUS (ft)	LOAD (lbs) (x 1000)	BOOM LENGTH (ft)
39.0	35.0	14.9	39.0
48.0	44.0	10.6	48.0
56.0	52.0	7.9	56.0
65.0	61.0	5.8	65.0
73.0	69.0	4.5	73.0
82.0	78.0	3.3	82.0
90.0	86.0	2.5	90.0

WEIGHT REDUCTIONS LOAD HANDLING DEVICES	
HOOKBLOCK: 40 Ton - 4 Sheave	1200 lbs
OVERHAUL BALL: 12 Ton w/Swivel	220 lbs
OPTIONAL HANDLING DEVICES	
30 ft. Extension - Stowed**	350 lbs
30 ft. Extension - Erected**	2000 lbs
30 ft. Ext. and 20 ft. Jib - Stowed**	750 lbs
30 ft. Ext. and 20 ft. Jib - Erected**	3500 lbs
Auxillary Nose Sheave**	250 lbs

*** Reduction of main boom capacities.*

⚠ CAUTION ⚠

THESE CHART VALUES ARE ONLY A GUIDE AND MUST NOT BE USED TO OPERATE THE CRANE. USE ONLY THE IN CAB LOAD CHARTS AND OPERATOR'S MANUAL FURNISHED WITH THE CRANE.

LOAD CHARTS

MANTIS® 8012

40 TON TELE-BOOM CRAWLER CRANE

LIFTING CAPACITIES

IN THOUSANDS OF POUNDS; 360°, 75% OF TIPPING, FIRM & LEVEL GROUND

AUXILIARY NOSE SHEAVE with TRACKS FULLY EXTENDED								
10,000 lb COUNTERWEIGHT								
RADIUS (ft)	MAIN BOOM LENGTH (ft)							RADIUS (ft)
	39.0	48.0	56.0	65.0	73.0	82.0	90.0	
10	11.0 70.9°	11.0 74.4°	11.0 76.8°					10
12	11.0 67.7°	11.0 71.9°	11.0 74.7°	11.0 76.8°				12
15	11.0 62.8°	11.0 68.0°	11.0 71.5°	11.0 74.0°	11.0 75.9°	11.0 77.4°		15
20	11.0 53.9°	11.0 61.2°	11.0 65.9°	11.0 69.3°	11.0 71.8°	11.0 73.8°	11.0 75.4°	20
25	11.0 43.9°	11.0 53.9°	11.0 60.1°	11.0 64.4°	11.0 67.6°	11.0 70.1°	11.0 72.0°	25
30	11.0 31.3°	11.0 45.9°	11.0 53.9°	11.0 59.3°	11.0 63.3°	11.0 66.3°	11.0 68.6°	30
35	11.0 3.8°	11.0 36.4°	11.0 47.2°	11.0 53.9°	11.0 58.7°	11.0 62.3°	11.0 65.1°	35
40		11.0 23.7°	11.0 39.5°	11.0 48.1°	11.0 53.9°	11.0 58.2°	11.0 61.6°	40
45			10.0 30.3°	10.1 41.7°	10.2 48.9°	10.2 54.0°	10.2 57.8°	45
50			8.2 16.7°	8.3 34.3°	8.4 43.3°	8.5 49.4°	8.5 54.0°	50
55				7.0 25.0°	7.1 37.1°	7.1 44.5°	7.1 49.9°	55
60				5.9 8.4°	5.9 29.8°	6.0 39.2°	6.0 45.5°	60
65					5.0 20.1°	5.1 33.1°	5.1 40.8°	65
70						4.3 25.7°	4.3 35.5°	70
75						3.7 15.2°	3.7 29.5°	75
80							3.1 21.9°	80
85							2.6 9.4°	85

° Boom angles are stated in degrees.

⚠ CAUTION ⚠

THESE CHART VALUES ARE ONLY A GUIDE AND MUST NOT BE USED TO OPERATE THE CRANE. USE ONLY THE IN CAB LOAD CHARTS AND OPERATOR'S MANUAL FURNISHED WITH THE CRANE.

LOAD CHARTS

MANTIS® 8012

40 TON TELE-BOOM CRAWLER CRANE

MANTIS WP-750 WORK PLATFORM

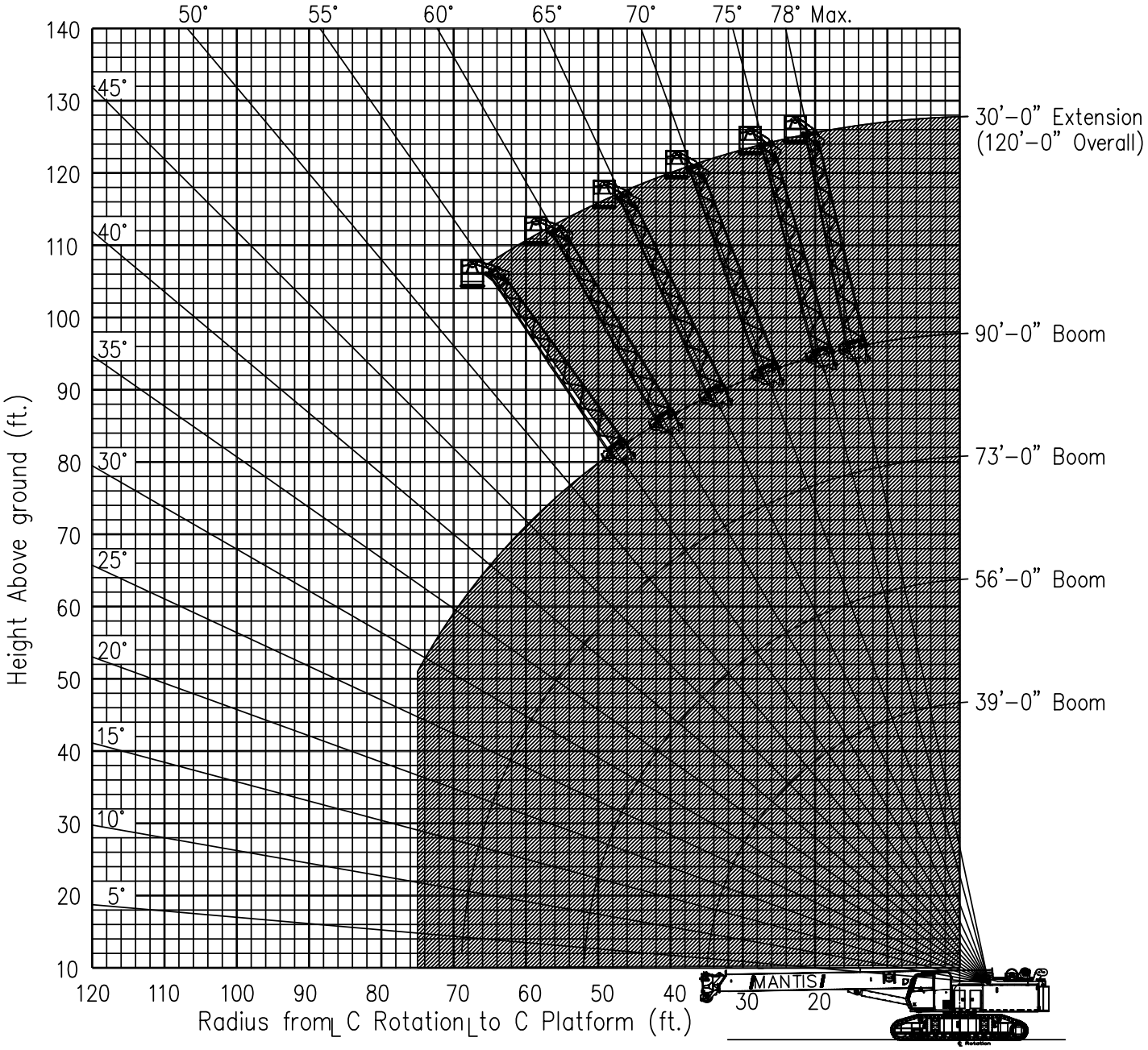

Limits of operation: Maximum load capacity = 750 lb Maximum radius when mounted on main boom = 78 ft

⚠ CAUTION ⚠

THESE CHART VALUES ARE ONLY A GUIDE AND MUST NOT BE USED TO OPERATE THE CRANE. USE ONLY THE IN CAB LOAD CHARTS AND OPERATOR'S MANUAL FURNISHED WITH THE CRANE.

LOAD CHARTS

MANTIS® 8012

40 TON TELE-BOOM CRAWLER CRANE

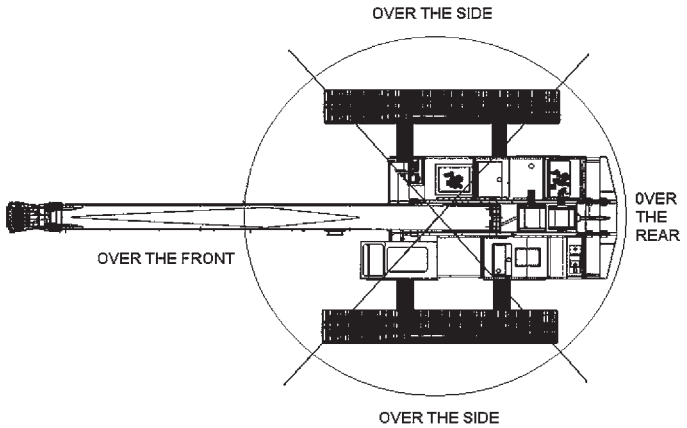

MANTIS MODEL 8012				
WIRE ROPE LINE PULL CAPACITIES				
PARTS OF LINE	MAIN WINCH (pounds)	AUX WINCH (pounds)	PARTS OF LINE	MAIN WINCH (pounds)
1	11,771	11,771	5	58,855
2	23,542	23,542	6	70,626
3	35,313	N/A	7	82,397
4	47,084	N/A	8	94,168
5/8 inch diameter wire rope, 6 x 37 Class, EIP, IWRC				

PLEASE READ, UNDERSTAND, AND FOLLOW THE MANUALS FURNISHED WITH THE CRANE (OPERATOR'S AND SAFETY) AS WELL AS THE CAPACITY LIMITATIONS AND GENERAL CONDITIONS LISTED BELOW PRIOR TO OPERATION OF THE CRANE. FAILURE TO DO SO MAY RESULT IN AN ACCIDENT.

Capacity Limitations and General Conditions:

1. This MANTIS CRANE as manufactured, meets the requirements of ANSI B30.5 (2000). Structure and stability have been tested in accordance with SAE J1063 and SAE J765, respectively. Modifications to the crane or use of optional equipment other than specified by the manufacturer can result in a reduction of capacity.
2. The main boom and auxliary boom head lifting capacities are determined by boom length and load radius. The extension and jib lifting capacities are determined by boom angle.
3. Rated capacity loads given are maximum covered by the manufacturer's warranty and are based on a freely suspended load with NO allowance for factors such as out-of-level operation, supporting surface conditions, hazardous surroundings, experience of personnel, etc. The operator shall establish practical working loads based on prevailing operating conditions, such as, but not limited to the above.
4. All rated capacity loads shown apply to original equipment as supplied by SpanDeck, Inc.
5. All rated capacity loads appearing above the bold line are based on structural strength; tipping should not be relied upon as a capacity limitation.
6. All rated capacity loads appearing below the bold line are based on stability and do not exceed 75% of tipping.
7. Deductions from rated capacities must be made for the weight of the hook block, headache ball, slings, spreader bar, and any other suspended equipment. See Lifting Capacity Deduction Chart for load handling devices supplied by SpanDeck, Inc.
8. A properly calibrated and maintained Load Moment Indicator (LMI) system will indicate boom mounted and other suspended equipment.
9. When making lifts where capacities may be within a zone limited by structural strength, the operator shall determine that the weight of the load is known within plus or minus (+/-) ten percent (10%) before making lift.
10. It is permissible to attempt to telescope boom with a load within the limits of rated capacities. However, boom telescope system hydraulic pressure, and/or boom lubrication may affect operation.
11. Side pull on boom is extremely dangerous and must be avoided.
12. **DO NOT** exceed manufacturers maximum specified reeving.
13. **DO NOT** lift load or extend boom without proper configuration of crane per load chart selected.
14. **DO NOT** attempt to lift any load when wind speed exceeds 20 mph.

Load moment indicating and anti-two block systems are operator aids and must never be used in lieu of job site lift planning calculations by the operator which must take into account ground conditions, weather and all other environmental factors prevailing at the time of the lift.
Prices and specifications are subject to change at any time without prior notice and are for factory installation at the time of original manufacture.
F.O.B Plant; Richlands, VA 24641. Illustrations and photographs may show optional equipment. Supercedes all previous issues.
Please see ***www.mantiscranes.com*** for most current information.

⚠ CAUTION ⚠

THESE CHART VALUES ARE ONLY A GUIDE AND MUST NOT BE USED TO OPERATE THE CRANE. USE ONLY THE IN CAB LOAD CHARTS AND OPERATOR'S MANUAL FURNISHED WITH THE CRANE.